Instructions

G3 SP™ Automatic Lubrication Pump

3A4676B

EN

For dispensing of NLGI Grades #000 to #2 greases. For Professional Use Only.

Not approved for use in explosive atmospheres or hazardous locations.

Part Nos., page 3

5100 psi (35.1 MPa, 351.6 bar) Pump Output Pressure

Important Safety Instructions

Read all warnings and instructions in this manual. Save all instructions.

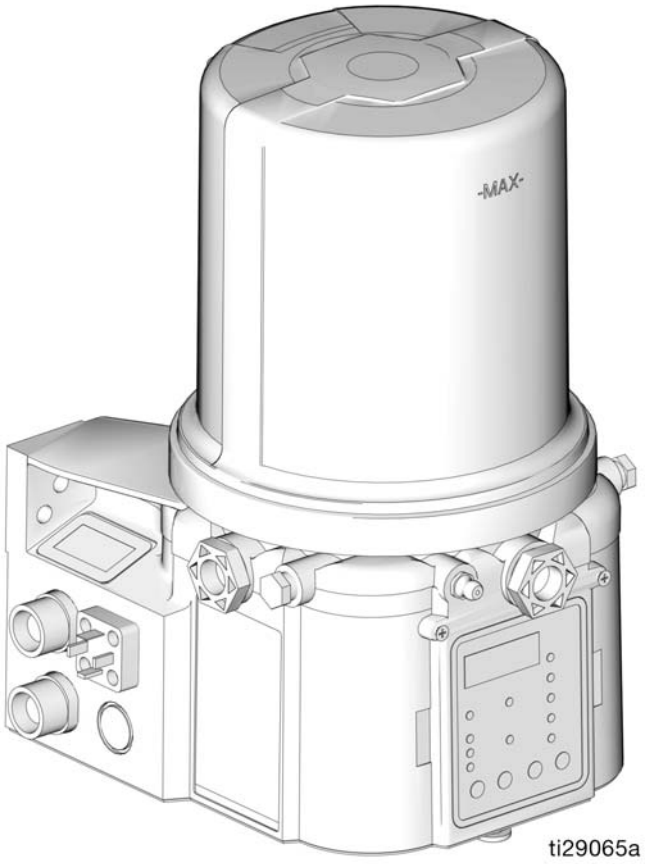

Intertek
3132066

Conforms to ANSI/UL 73
Certified to CAN/CSA
Std. 22.2 No 68-09

24V and 110-240VAC Pumps ONLY

PROVEN QUALITY. LEADING TECHNOLOGY.

Contents

Part / Model Numbers

The Part Number is a six-digit unique number that is only used to order the G3 Pump. Directly related to this six digit Part Number is the configured Graco Model Number. This configured number identifies the distinct features of a specific G3 Pump. To help you understand each component that makes up the Model Number see Understanding Your Model Number, page 4. The tables below shows the relationship between each Part Number and its related Model Number.

2 Liter Models

Part Numbers	Model Numbers
96G221	G3-G-12SP-2L0L09-10C00000
96G223	G3-G-24SP-2L0L09-10C00000
96G227	G3-G-ACSP-2L0L00-1D00000

4 Liter Models

Part Numbers	Model Numbers
96G222	G3-G-12SP-4L0L09-10C00000
96G224	G3-G-24SP-4L0L09-10C00000
96G228	G3-G-ACSP-4L0L00-1D00000

8 Liter Models

Part Numbers	Model Numbers
96G225	G3-G-24SP-8L0L09-10C00000

12 Liter Models

Part Numbers	Model Numbers
96G226	G3-G-24SP-120L09-10C00000

16 Liter Models

Part Numbers	Model Numbers
96G245	G3-G-ACSP-160L00-1D000000

Understanding the Model Number

Use the Code Sample provided below to identify each component's location in the Model Number. The options for each component that make up the code are provided on the lists below.

NOTE: Some pump configurations are not available. Contact Graco Customer Service or your local Graco distributor for assistance.

	G	3	-	G	-	__	__	S	P		__	__	0	L	__	__		1	__	__	0	0	0	0	0
Code Sample:						a	a	b	b	-	c	c	d	e	f	f	-	g	h	i	j	k	m	n	p

G3 - G = Identifies pump as being a G3; G = Grease

Code aa: Power Source

- 12 = 12 Volts DC
- 24 = 24 Volts DC
- AC=100-240 Volts AC

Code bb: Operation Control

- SP = Series Progressive

Code cc: Reservoir Capacity (Liters)

- 2L = 2 Liters
- 4L = 4 Liters
- 8L = 8 Liters
- 12 = 12 Liters
- 16 = 16 Liters

Code d: Follower Plate Installed

- 0 = No Follower Plate

Code e: Low Level Option

- L = Low Level with Controller

Code ff: Options

- 00=No Options
- 09 =Alarm, manual run and low level in CPC

Code g, h, i, j, k, m, n, p

NOTE: Codes g - p relate to a specific location on the G3 pump. See **FIG. 1** for these locations.

- C = CPC
- D=DIN
- 1 = Sensor Number
- 0 = Not populated

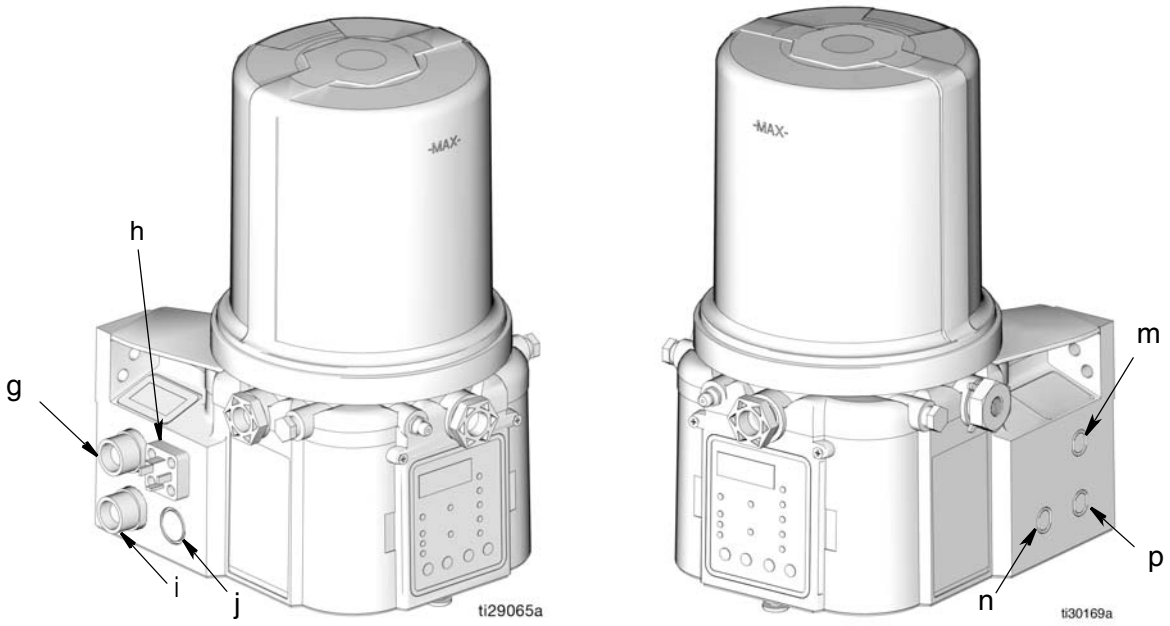

FIG. 1

Warnings

The following warnings are for the setup, use, grounding, maintenance, and repair of this equipment. The exclamation point symbol alerts you to a general warning and the hazard symbols refer to procedure-specific risks. When these symbols appear in the body of this manual or on warning labels, refer back to these Warnings. Product-specific hazard symbols and warnings not covered in this section may appear throughout the body of this manual where applicable.

WARNING

ELECTRIC SHOCK HAZARD

This equipment must be grounded. Improper grounding, setup, or usage of the system can cause electric shock.

- Turn off and disconnect power at main switch before disconnecting any cables and before servicing or installing equipment.
- Connect only to grounded power source.
- All electrical wiring must be done by a qualified electrician and comply with all local codes and regulations.

EQUIPMENT MISUSE HAZARD

Misuse can cause death or serious injury.

- Do not operate the unit when fatigued or under the influence of drugs or alcohol.
- Do not exceed the maximum working pressure or temperature rating of the lowest rated system component. See **Technical Data** in all equipment manuals.
- Use fluids and solvents that are compatible with equipment wetted parts. See Technical Data in all equipment manuals. Read fluid and solvent manufacturer's warnings. For complete information about your material, request MSDS from distributor or retailer.
- Turn off all equipment and follow the **Pressure Relief Procedure** when equipment is not in use.
- Check equipment daily. Repair or replace worn or damaged parts immediately with genuine manufacturer's replacement parts only.
- Do not alter or modify equipment. Alterations or modifications may void agency approvals and create safety hazards.
- Make sure all equipment is rated and approved for the environment in which you are using it.
- Use equipment only for its intended purpose. Call your distributor for information.
- Route hoses and cables away from traffic areas, sharp edges, moving parts, and hot surfaces.
- Do not kink or over bend hoses or use hoses to pull equipment.
- Keep children and animals away from work area.
- Comply with all applicable safety regulations.

WARNING

SKIN INJECTION HAZARD

High-pressure fluid from dispensing device, hose leaks, or ruptured components will pierce skin. This may look like just a cut, but it is a serious injury that can result in amputation. **Get immediate surgical treatment.**

- Do not point dispensing device at anyone or at any part of the body.
- Do not put your hand over the fluid outlet.
- Do not stop or deflect leaks with your hand, body, glove, or rag.
- Follow the **Pressure Relief Procedure** when you stop dispensing and before cleaning, checking, or servicing equipment.
- Tighten all fluid connections before operating the equipment.
- Check hoses and couplings daily. Replace worn or damaged parts immediately.

PRESSURIZED EQUIPMENT HAZARD

Over-pressurization can result in equipment rupture and serious injury.

- A pressure relief valve is required at each pump outlet.
- Follow **Pressure Relief Procedure** in this manual before servicing.

PLASTIC PARTS CLEANING SOLVENT HAZARD

Many solvents can degrade plastic parts and cause them to fail, which could cause serious injury or property damage.

- Use only compatible water-based solvents to clean plastic structural or pressure-containing parts.
- See **Technical Data** in this and all other equipment instruction manuals. Read fluid and solvent manufacturer's MSDSs and recommendations.

WARNING

MOVING PARTS HAZARD

Moving parts can pinch, cut or amputate fingers and other body parts.

- Keep clear of moving parts.
- Do not operate equipment with protective guards or covers removed.
- Pressurized equipment can start without warning. Before checking, moving, or servicing equipment, follow the **Pressure Relief Procedure** and disconnect all power sources.

PERSONAL PROTECTIVE EQUIPMENT

Wear appropriate protective equipment when in the work area to help prevent serious injury, including eye injury, hearing loss, inhalation of toxic fumes, and burns. This protective equipment includes but is not limited to:

- Protective eyewear, and hearing protection.
- Respirators, protective clothing, and gloves as recommended by the fluid and solvent manufacturer

Installation

Component Identification

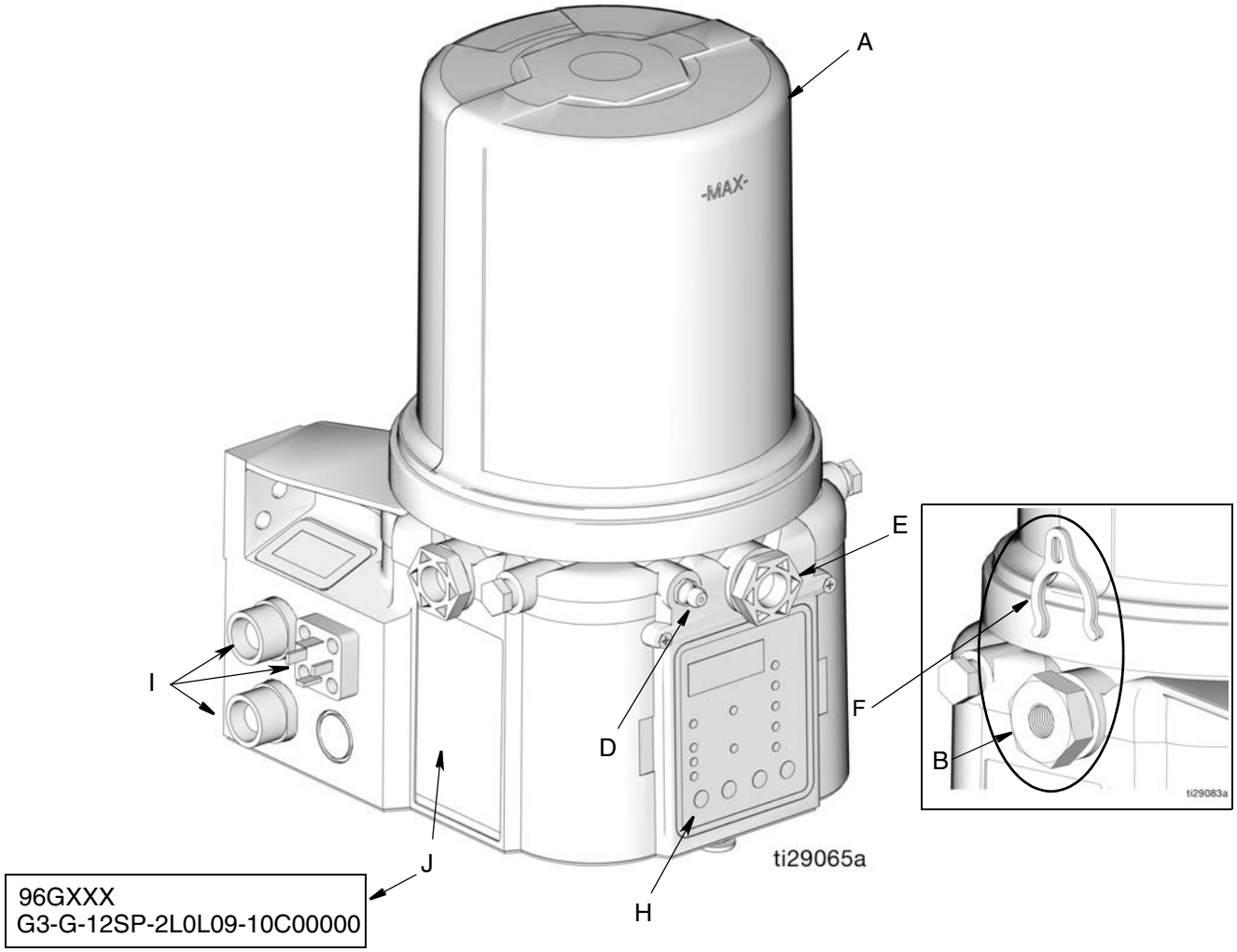

FIG. 2:

Key:

A Reservoir
B Pump Element (1 included. Can accommodate 3 total)
D Zerk Inlet Fill Fitting (1 included)
E Pump Outlet Plug (2 included)
F Volume Control Spacers (2 included. More spacers = less output volume per stroke) (also see FIG. 13, page 17)
G Fuse (DC models only - Not included, not shown. Available from Graco. See Parts, page 43.)
H Control Panel
I Power / Sensor Panel (both sides; only one side shown)
J Part Number / Model Number example only shown, (see pages 4, Understanding the Model Number, for details)
K Power Cord (not shown)

Typical Installation

Series Progressive Divider Valve Installations

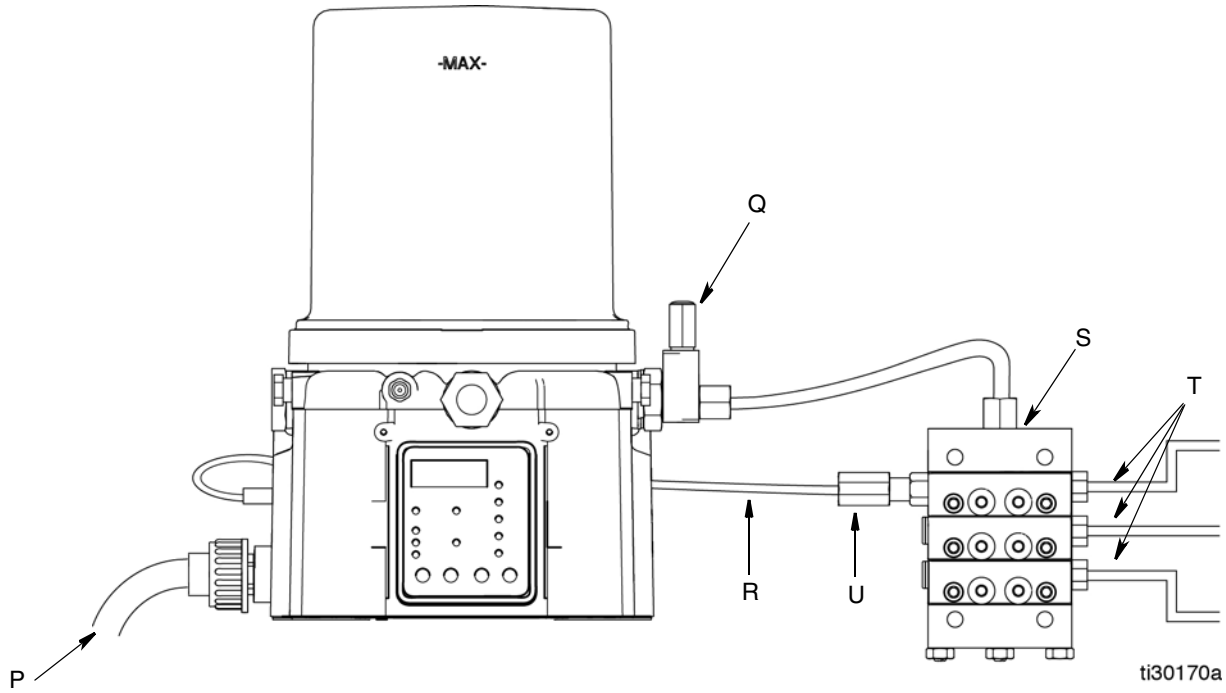

FIG. 3

P Connected to fused power source
Q Pressure relief valve (Not included. Required for each outlet - user supplied. See Parts, page 43)
R Cycle indicator sensor cable
S Series progressive divider valves
T To lube points
U Proximity Switch

Choosing an Installation Location

AUTOMATIC SYSTEM ACTIVATION HAZARD

The G3 system is equipped with an automatic timer that activates the pump lubrication system. Unexpected activation of the system could occur and result in serious injury, including skin injection and amputation.

Before you install or remove the lubrication pump from the system, disconnect and isolate all power supplies and relieve all pressure.

- Select a location that will adequately support the weight of the G3 Pump and lubricant, as well as all plumbing and electrical connections.
- Refer to the mounting hole layouts provided in the Mounting Pattern section of this manual, page 46. No other installation configuration should be used.
- Use designated mounting holes and provided configurations only.
- Use the three fasteners (included) to secure the G3 to the mounting surface.
- Some installations may require an additional reservoir support bracket. See Table below for bracket information

Part No	Description
571159	Reservoir bracket and strap
125910	L-Bracket for pump
127665	USP to G-Series mounting bracket

System Configuration and Wiring

Grounding

The equipment must be grounded to reduce the risk of static sparking and electric shock. Electric or static sparking can cause fumes to ignite or explode. Improper grounding can cause electric shock. Grounding provides an escape wire for the electric current.

Improper installation of the grounding conductor may result in a risk of electric shock. This product must be installed by a qualified electrician in compliance with all state and local codes and regulations.

If the product is permanently connected:

- it must be installed by a qualified electrician or serviceman.
- it must be connected to a grounded, permanent wiring system.

If an attachment plug is required in the end use application:

- it must be rated for the product electrical specifications.
- it must be an approved, 3-wire grounding type attachment plug.
- it must be plugged into an outlet that is properly installed and grounded in accordance with all local codes and ordinances.
- when repair or replacement of the power cord or plug is required, do not connect the grounding wire to either flat blade terminal.

Fuses

NOTICE

Fuses (user supplied) are required on all DC models. To avoid equipment damage:

- Never operate G3 Pump DC models without a fuse installed.
- A fuse of the correct voltage must be installed in line with the power entry to the system.

Fuse Kits are available from Graco. The following Table identifies the correct fuse to use for your input voltage and the corresponding Graco Kit number.

Input Voltage	Fuse Value	Graco Kit No.
12 VDC	7.5 A	571039
24 VDC	4 A	571040

Recommendations for Using Pump in Harsh Environments

- Use pump with CPC style power cable.
- Use a corrosion preventative electrical grease on all contacts.

Alarm Output and Remote Illumination Response

The following tables include graphical representations of the connector as it appears on the unit, a pin-out associated with the connector and a typical installation wiring diagram. An internal representative wiring diagram is included where it is deemed useful.

Wire colors provided on these pages only refer to the power cable provided by Graco with this product.

	Outputs (via 5 wire CPC power cable)	
	Pin 4 Alarm	**Pin 7** Low Level
Unit in OFF Mode	Off	Off
Unit in ON Mode	Off	Off
Warning Condition	Off	Off
Low Level Indication (Advanced Programming Setting A9 OFF)	Off	Activated (On)
Low Level Indication (Advanced Programming Setting A9 ON)	Off	Toggles On and OFF once per second
Fault Condition (Advanced Programming Setting A7 OFF)	Toggles On and Off once per second	◆
Fault Condition (Advanced Programming Setting A7 ON)	Activated (On)	◆

◆ Stays on only for Low Level fault condition.

Wiring and Installation Diagrams

The following Table identifies the wiring and installation diagrams provided in this manual.

Diagram	Symbol	Page #
Power DIN AC	AC	**13**
Power CPC DC	12 VDC 24 VDC	**13**
Inputs (M12)		**14**

Power DIN AC - 15 foot: Part No. 16U790

Pin and Related Wire Color (FIG. 4)

Pin	Pin Name	Color
1	Line	Black
2	Neutral	White
3	Not Used	Not Used
	Ground	Green

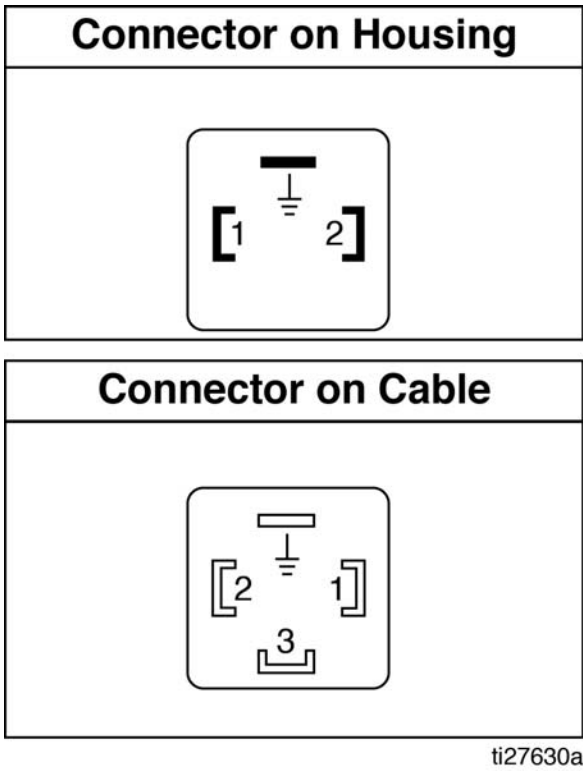

FIG. 4

Pin and Related Wire Color (FIG. 5)

Power CPC DC - 5 Wire

Part No.: 127780: 15 ft (4.5 m)
Part No.: 127781: 20 ft (6.1 m)
Part No.: 127782: 30 ft (9.1 m)

CPC Pin	Pin Name	Wire Color
1	Not Used	Not Used
2	-VDC/Com	Black
3	+VDC	Red
4	Alarm	White
5	Manual	Orange
6	Not Used	Not Used
7	Low Level Warning	Green

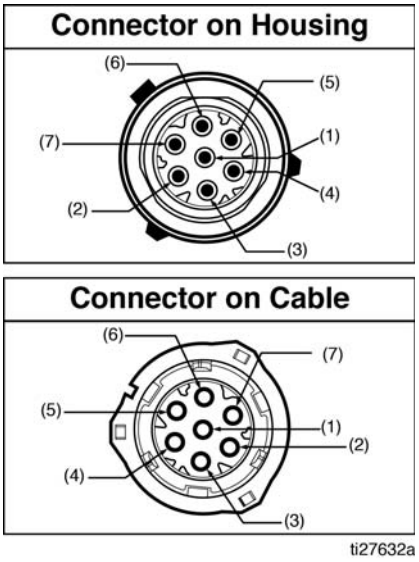

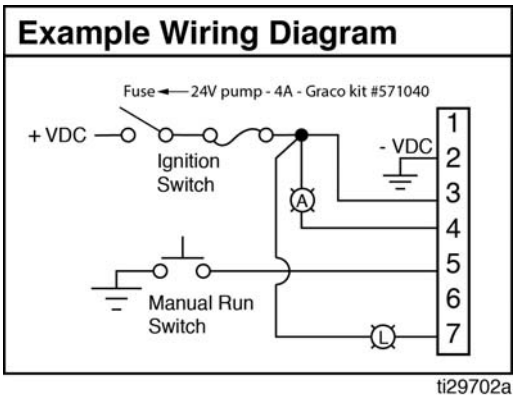

FIG. 5

Inputs (M12)

See Technical Data, page 44 for ratings.

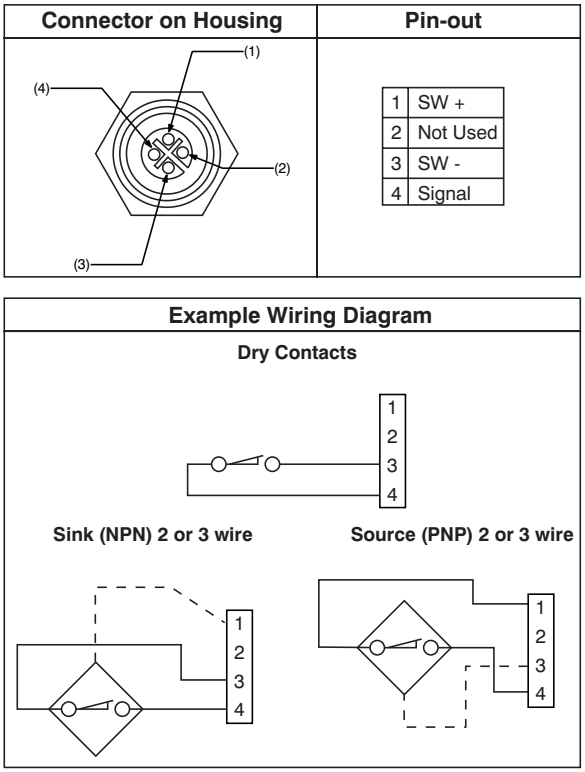

FIG. 6

Part No. 124333: Cable Pin Out (M12) for 5 m Cable

Wire Colors (FIG. 7)

Item No.	Color
1	Brown
2	White
3	Blue
4	Black

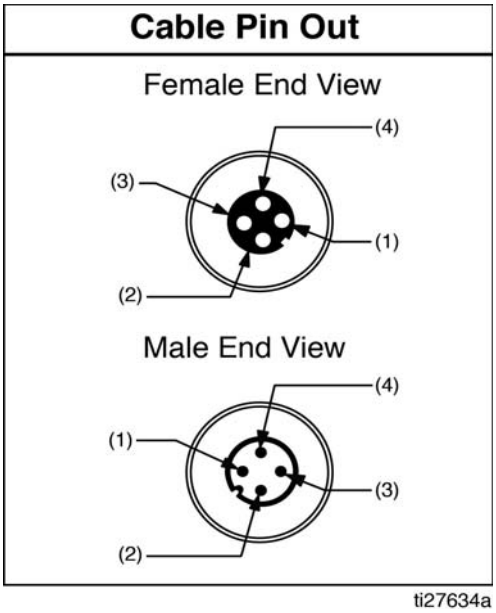

FIG. 7

Part No. 124300: Male Flying Lead Pin Out (M12)

Wire Colors (FIG. 8)

Item No.	Color
1	Brown
2	White
3	Blue
4	Black

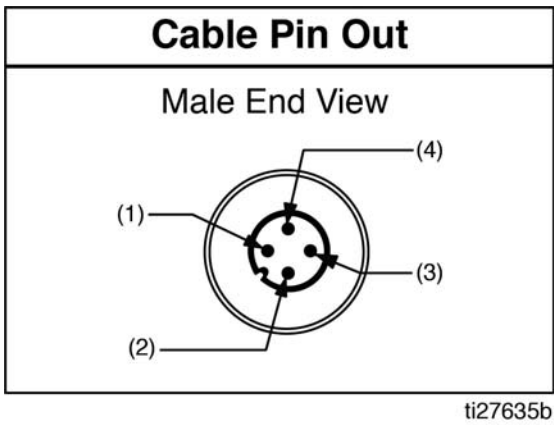

FIG. 8

Part No. 124301: 4 Pin (M12) Female Field Wireable Connector for 6-8 mm Cable

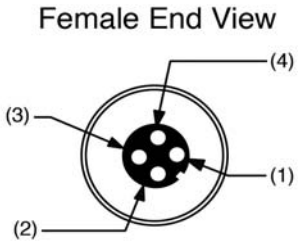

FIG. 9

Part No. 124594: 4 Pin (M12) Male Field Wireable Connector for 6-8 mm Cable

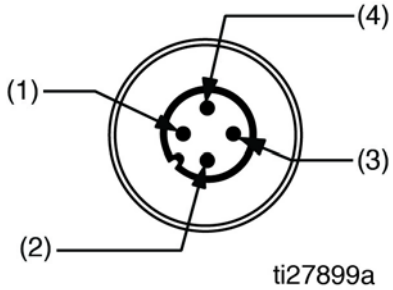

FIG. 10

NOTE: Field wireable connectors are for sensors with integrated cable.

Part No. 124595: 5 Pin (M12) Male Field Wireable Connector for 8-11 mm Cable

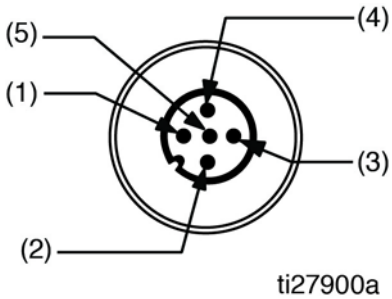

FIG. 11

NOTE: Field wireable connectors are for sensors with integrated cable.

Setup

Pressure Relief

Follow the Pressure Relief Procedure whenever you see this symbol.

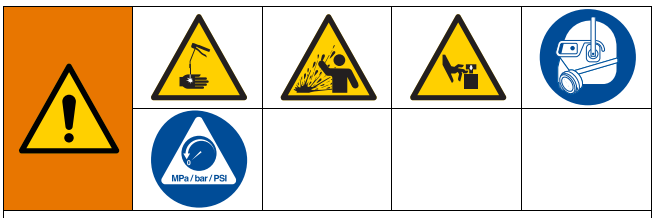

This equipment stays pressurized until pressure is manually relieved. To help prevent serious injury from pressurized fluid, such as skin injection, splashing fluid and moving parts, follow the Pressure Relief Procedure when you stop dispensing and before cleaning, checking, or servicing the equipment.

Relieve pressure in system using two wrenches working in opposite directions on pump element and pump element fitting to **slowly loosen fitting only** until fitting is loose and no more lubricant or air is leaking from fitting.

NOTE: When loosening pump element fitting, do NOT loosen **pump element**. Loosening pump element will change the output volume.

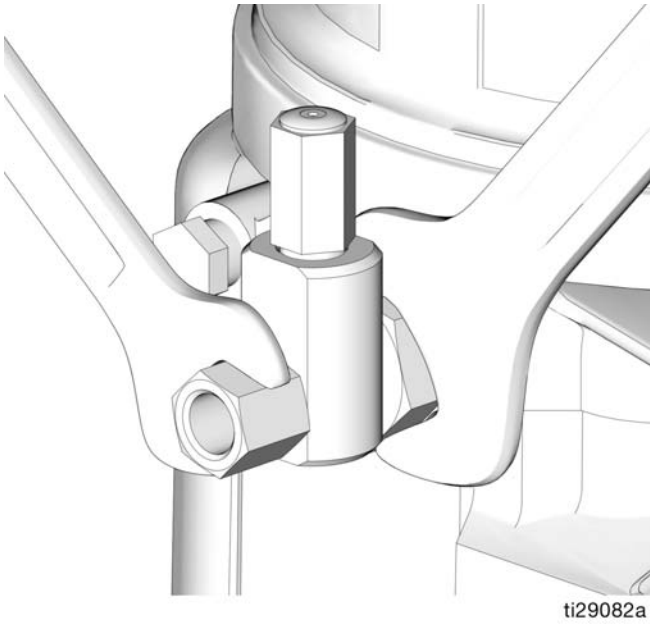

FIG. 12

Connecting to Auxiliary Fittings

NOTICE

Do not attach unsupported equipment to auxiliary fittings such as fill ports and pump element. Attaching unsupported equipment to these fitting can result in irreparable housing damage.

- Always use two wrenches working in opposite directions when connecting anything to pump element or auxiliary fittings. See FIG. 12 for an example.
- Torque pump element fittings to 50 in. lbs (5.6 N•m).
- When connecting pump element into housing torque to 50 in. lbs (5.6 N•m).

Pressure Relief Valves

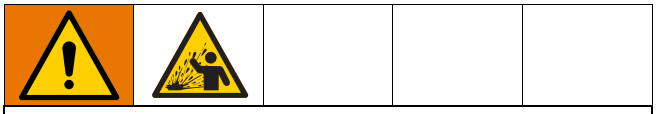

To prevent over-pressurization, which can result in equipment rupture and serious injury, a pressure relief valve appropriate for the lubrication system must be installed close to every pump outlet to alleviate unintended pressure rises in the system and protect the G3 pump from damage.

- Only use a pressure relief valve that is rated for no more than the working pressure of any component installed in the system. See Technical Data, page 41.
- Install a pressure relief valve close to every pump outlet; before any auxiliary fitting.

NOTE: A pressure relief valve can be purchased from Graco. See Parts, page 43.

Setting Pump Outlet Volume

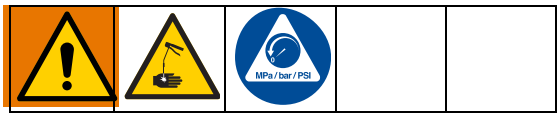

NOTE:

- Before making any adjustments to pump volume, **Relieve Pressure** following procedure on page 16.
- Only use Graco supplied spacers to control output volume.

1. Use a wrench to turn pump element counter-clockwise to loosen. Do not remove entire pump element. Only back pump element out enough to allow spacer to be slid on or off.
2. If needed, remove or insert spacers to achieve required pump output volume. A tool may be needed to facilitate removal.

   Pump volume control is set using either no (0) spacers, 1 or 2 spacers (FIG. 13).

   Do not use more than 2 spacers to adjust output volume.

No. Spacers	Output Volume / Minute	
	cubic inches	cubic cm
2	0.12	2
1	0.18	3
0	0.25	4

NOTE:

- The amount of dispensed volume can vary depending on external conditions such as lubricant temperature and back pressure from downstream connections.
- Use of these volume adjustment in conjunction with setting the ON time of the pump will allow for control of the output volume.
- Use these volume adjustments as a starting point and adjust as necessary to ensure desired lubrication dispense.

3. Tighten pump element fitting. Torque fitting to 50 in. lbs (5.6 N•m).

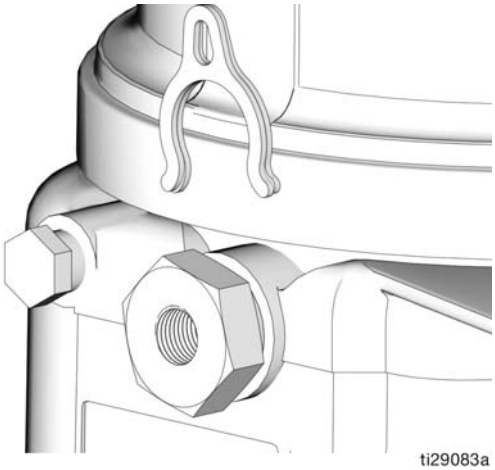

FIG. 13

Loading Grease

To ensure optimal performance from the G3:

- Only use NLGI #000 - #2 greases appropriate for your application, automatic dispensing, and the equipment's operating temperature. Consult with machine and lube manufacturer for details.
- The reservoir can be filled using a hand operated pump, pneumatic pump or electric transfer pump.
- Do not overfill (FIG. 16).
- Do not operate G3 without reservoir attached.

NOTICE

- Always clean inlet fitting (D) (FIG. 14) with a clean dry cloth prior to filling reservoir. Dirt and/or debris can damage pump and/or lubrication system.
- Care must be used when filling the reservoir using a pneumatic or electric transfer pump to not pressurize and break the reservoir.

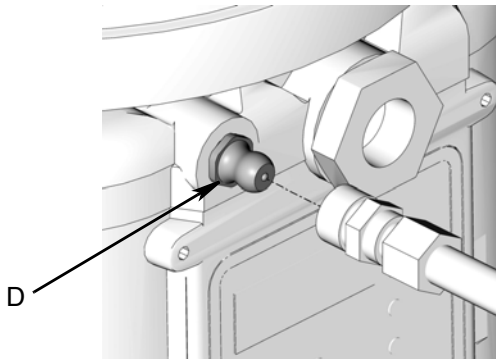

FIG. 14

1. Connect fill hose to inlet fitting (D) (FIG. 15).

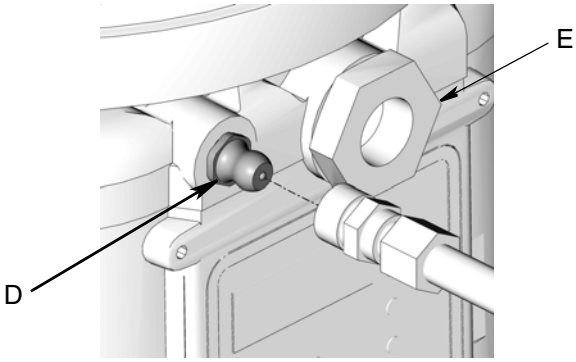

FIG. 15

2. For higher viscosity fluids, start pump to rotate stirring paddle during fill to prevent air pockets from forming in grease.

   To start the pump press the manual run button.

3. Fill reservoir with NLGI grease to max fill line.

NOTE: Vent port, located in rear of reservoir, should not be used as an overfill port/indicator.

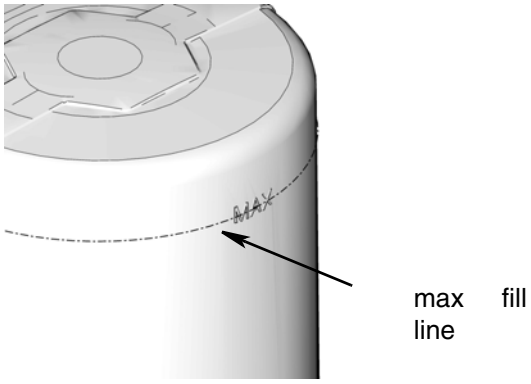

FIG. 16

4. Remove fill hose.

Changing Greases

When changing greases, always use compatible fluids or greases.

Priming

NOTE: It is not necessary to prime pump every time pump is filled with lubricant.

Pump only requires priming the first time it is used or if it is allowed to run dry.

1. Loosen pump element fitting (FIG. 17).

NOTE: When loosening pump element fitting, do NOT loosen **pump element**. Loosening pump element will change the output volume

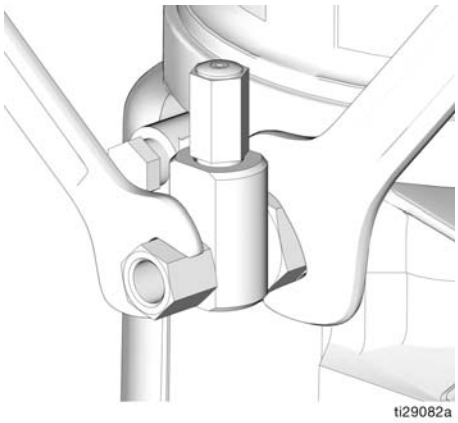

FIG. 17

2. Only run pump until air is no longer dispensed with the lubricant coming out of element fitting (FIG. 18).

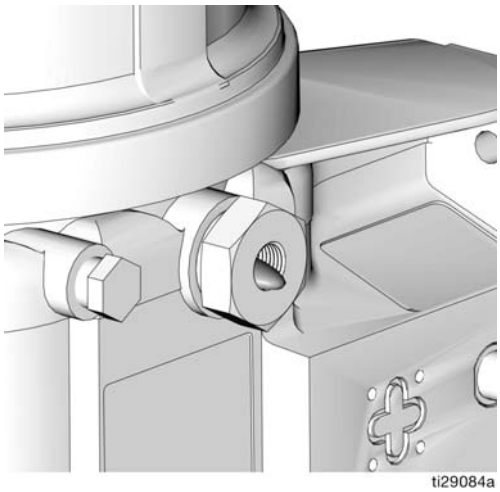

FIG. 18

3. Tighten pump element fitting using two wrenches working in opposite directions (FIG. 17).

Quick Setup Guide

Max Model System - Divider Valve System with Single Sensor Input

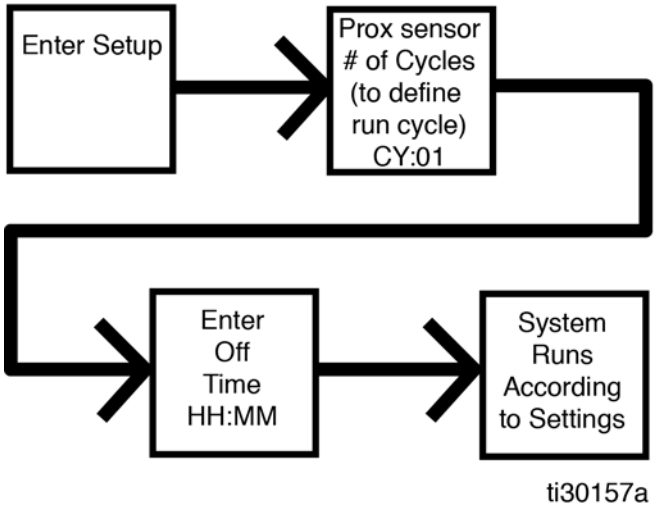

Control Panel Overview (FIG. 19)

NOTE: *Programming instructions begin on page 21.*

ON / BACKUP TIME

- LED lights when ON Time/Backup Time is running.
- Display shows time as MM:SS (minutes and seconds). i.e., 08:30 is 8 minutes: 30 seconds.
- Sets the limits for the amount of time to complete a cycle before an alarm warning is activated.
- Counts down from a set time to zero.

DISPLAY

- A blinking LED under HH, MM, SS or ## identifies type of measurement unit you are setting; i.e., HH is hours.
- A blinking number on the display indicates the G3 is in SETUP MODE.
- In RUN MODE displayed numbers count up or down. See Time ON and Time OFF.

OFF TIME

- LED lights when OFF Time is used to control Pump OFF function.
- Value is entered in HH:MM (hours and minutes) or HHHH (hour, hour, hour, hour) when A8 is on.
- Displays in HH:MM (hours and minutes) when > 1 hour.
- Times pump rest between lube events.
- Counts down from set time to zero.

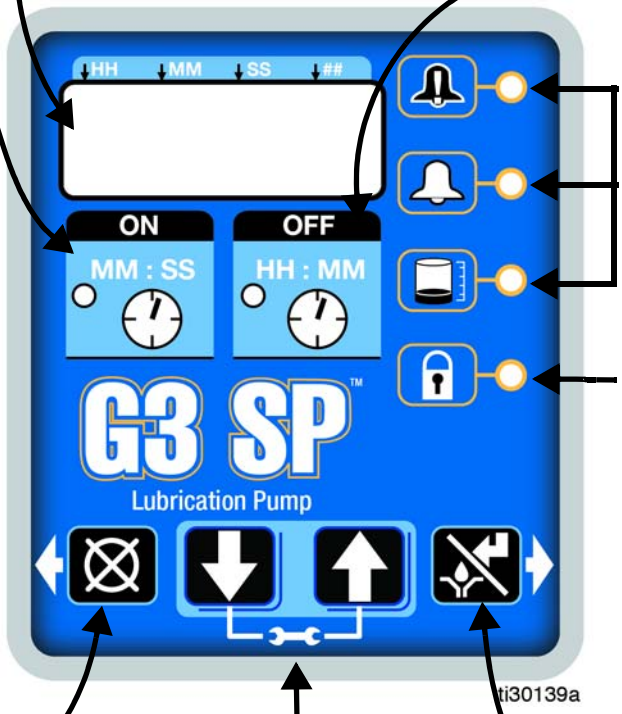

ALARM ICONS

LED next to icon lights when a fault / warning event occurs during a run cycle. See page 32 for a complete description of these alarm scenarios.

PIN ICON

- LED next to icon lights indicating PIN is required to enter setup.
- In SETUP MODE LED lights when setting up the PIN.

LEFT DIRECTION ARROW / RESET

- In SETUP MODE: moves cursor in display one field to the left.
- In RUN MODE: single press clears warning.
- In RUN MODE: pressing for one second ends run cycle if no warnings.
- In ALARM MODE: pressing and holding for 3 seconds clears fault / warning and switches cycle to OFF MODE.

UP and DOWN ARROW

- Hold both the UP and DOWN ARROW buttons down together for 3 seconds to enter SETUP MODE.
- In SETUP MODE: increases or decreases number values shown in display.

RIGHT DIRECTION ARROW / MANUAL RUN / ENTER

- In SETUP MODE: saves entry, moves cursor in display one field to the right or to the next setup step.
- In RUN MODE: starts a manual run cycle.

FIG. 19

Programming

Program the controller to set up the number of cycles (ON) and a timed OFF Time/Rest period.

By default, the number of the lubrication cycles programmed is 1 and the backup time between cycles is 4 minutes. The OFF/Rest Time is 2 hours.

If the unit powers-up in ON mode and has not been primed, hold the reset button (shown on the right) for 1 second to change to the OFF mode.

NOTE:

- A blinking number on the display indicates the G3 is in SETUP MODE.
- In ON/Cycle MODE numbers on the display do not blink.
- After 60 seconds of no activity, the device returns to OFF/Rest Time and the OFF Time restarts counting down from the total programmed amount of time. It does **not** resume the countdown from the point where the cycle was interrupted when you entered SETUP MODE.

Entering Setup Mode

Press both the UP and DOWN ARROW buttons together for 3 seconds to enter the SETUP MODE.

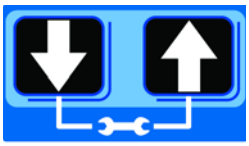

NOTE: If the lock LED is lit after entering Setup Mode and four 0000's are displayed, the unit has a PIN Code lock out enabled. See the following section: Entering a PIN Code to Access Setup Mode.

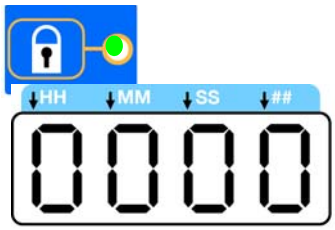

Entering a PIN Code to Access Setup Mode

The G3 controller does not require a user to provide a PIN code to access the programming features of the unit. However, Graco understands that some users may want to protect the programming settings and therefore, an option for adding PIN Code authorization is available. The instructions for setting up PIN Code Authorization are provided in the Advanced Programming section of this manual. See page 25.

To enter the PIN Code:

1. Press both the UP and DOWN ARROW buttons for 3 seconds.

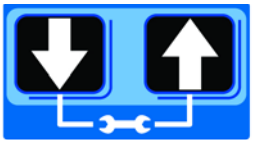

2. The LED next to the LOCK ICON on the display lights and the 4 zeros appear on the display indicating the system requires a PIN Code entry to run the G3 in SETUP MODE.

3. The cursor is automatically positioned to enter the first character of the PIN Code. Use the UP and DOWN ARROW buttons to move up and down through the numbers 0-9 until the first number in the PIN code is displayed in the field.

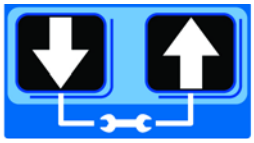

4. Press the ENTER button to set the number. The cursor automatically moves to the next number field.

5. Repeat steps 3 and 4 for each PIN Code prompt field.

If the PIN Code you entered is correct, the first editable character on the display will flash.

NOTE: A blinking field on the display indicates the G3 is in SETUP MODE. In RUN MODE numbers on the display will not blink.

Cycle Setup

Cycle controls the number of lube cycles (as monitored by an external cycle monitor) completed before the pump rests.

NOTE:

- You must program at least **one** cycle. Zero is not an available option.
- The first number displayed after the "CY" on the display blinks, indicating the device is ready to program the number of cycles.

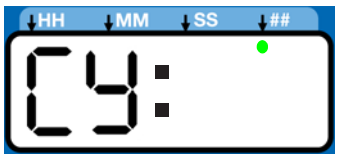

- The LED under the # sign lights when setting the number of cycles.

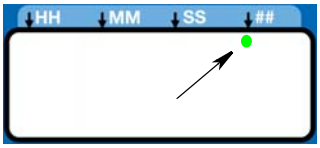

1. Program the number of cycles by pressing the UP or DOWN ARROW button to move up or down through number 0-9.

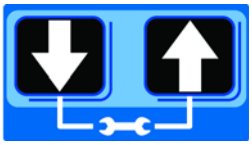

2. The cycle field is a 2 digit number. When the correct first numeral of the number displays, press the ENTER button to save the number. The cursor automatically moves to the second number field.

   NOTE: A leading zero (0) must be entered in the first field if the number of cycles is fewer than 10.

3. Press the ENTER button, to save the CY information.

4. After you set the last field and press the ENTER button, the G3 saves the Cycle information and moves to setting OFF Time, page 22.

PUMP OFF / REST Setup

After setting the Cycle (CY) parameters the OFF or pump rest cycle must be set up.

- The LED next to the clock in the OFF field lights, indicating you are setting the OFF Time parameters.

- OFF Time is set in Hours and Minutes (HH: MM) or Hour, Hour, Hour, Hour (HHHH) when A8 is on.

- An LED flashes under either HH when programming hours **OR** MM when programming minutes.

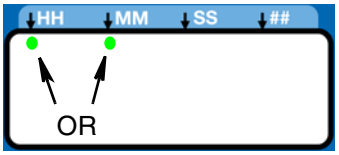

- In SETUP MODE the number displayed in the third and fourth fields on the right side of display blink, indicating the device is ready to program the OFF Time hours when A8 is off. When A8 is on, the number displayed in the first field on the left side of the display, blinks.

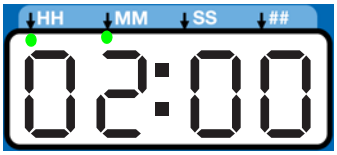

- The total amount of OFF Time must be at least twice as long as the ON Time. If a value less than twice the ON Time is entered, the pump will run three times and will fault out if the time is not corrected before the third time.

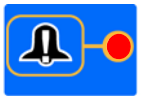

  If this time does not meet the application needs, contact Graco Customer Support.

Programming OFF Time: A8 Off

NOTE: The maximum OFF time is 8 hours when A8 is off.

1. OFF time is set in 15 minutes increments. Use the UP or DOWN ARROW button to set the time.

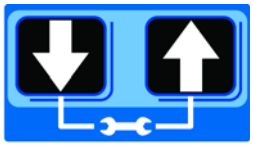

2. Press the ENTER button to save the OFF Time information.

Programming OFF Time: A8 On

NOTE: You **must** program leading zeros in the number field and press the ENTER button to save the zero selection; i.e, 400 hours = 0400.

1. To set the OFF Time use the UP or DOWN ARROW button to scroll through numerals 0 to 9 until the desired number appears in the first HHHH (hours) field.

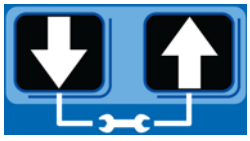

2. Press the ENTER button to lock in the selection. The next HHHH number field to the right flashes indicating it is ready for programming.

3. Use the UP or DOWN ARROW button to scroll through numerals 0 to 9 until the desired number appears in the second HHHH number field.

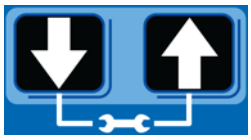

4. Press the ENTER button to lock in the selection. The next number field to the right flashes indicating it is ready for programming.

5. Repeat steps 1 - 4 to set the next HHHH (hours) field.

6. After pressing the ENTER button to set the last HHHH field, the OFF Time information is saved.

Advanced Programming

There are 7-9 Advanced Programming options. The following Table Identifies each option and when it is used.

Advanced Option	Setting	Format/ Description	Why Use This?
A1	Lockout Code (Optional)	Secures setup modes with PIN	Prevents unauthorized users to adjusting settings.
A2	Low Level Alarm Time	**MM:SS** (minutes:seconds) sets amount of time between Low Level Warning to Low Level Fault. Default = 3 minutes	To accommodate most lubrication situations, a conservative amount of time is programmed between the low level warning and fault to help protect unit from running dry. If necessary the amount of time the unit runs before stopping due to a low level fault can be adjusted.
A4	Alarm Retry	Sets number of automatic retries after a Cycle Alarm. Default = 0	Establishes the number of times the unit automatically retries lubricating after a cycle alarm to determine if a temporary or false signal can be cleared.
A5	Active Alarm	Changes alarm output behavior. Default = OFF	Uses alarm output to determine if a unit has an alarm AND/OR loses power. The output turns ON when power is applied. It turns OFF when power is lost or an alarm occurs. Normal operation (OFF) will only activate alarm output in an alarm condition when power is on. Can change (set to ON) to activate alarm with power ON and deactivate with power OFF OR warning. Used to manage power outage.
A7	Constant Alarm Output on Fault	Changes alarm output behavior. Default = OFF	This function changes the behavior of the alarm output in a fault from either toggling once every second or steady on.
A8	4 Digit Hour Off Time	Changes maximum OFF time. Default = OFF	This function changes OFF time from HH:MM to HHHH. It allows a maximum of 9999 hours of OFF time.
A9	Toggle Low Level Output on Warning or Fault	Changes Low Level Indication behavior. Default = OFF	This function changes the behavior of the low level output in a warning or fault from either steady on or toggling once per second.
A10*	Low Level Reset Upon Power ON	Changes low level fault upon power ON. Default = OFF	This function changes the behavior of the low level fault upon power ON.
A11*	Warning OFF through alarm relay	Changes alarm output behavior. Default = OFF	This function changes the behavior of the alarm output in a warning condition to always OFF.

*Models with Firmware 6.03 and later

Entering a PIN Code for the First Time

A1 - Setting Up PIN Code

A PIN Code can be programmed into the G3 to protect the settings from inadvertently being changed by unauthorized users.

1. Press the UP ARROW button for 10 seconds.

The LED next to the LOCK ICON on the display lights, indicating you have entered the PIN Mode.

2. The word OFF appears in the display. Press the UP or DOWN ARROW button to change this to ON.

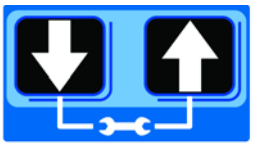

3. Press the ENTER button to enter the PIN Code.

4. The cursor automatically is positioned to entered the first character of the PIN Code. Use the UP and DOWN ARROW buttons to move up and down through the numbers 0-9 until the first number in the PIN code is displayed in the field.

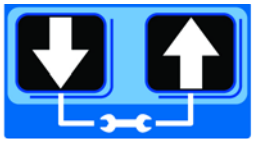

5. Press the ENTER button to set the number. The cursor automatically moves to the next number field.

6. Repeat steps 4 and 5 for each PIN Code prompt field.
7. Press the ENTER button to save the PIN Code and exit Advanced Setup.

Entering Advanced Setup

Press the UP ARROW button for 10 seconds.

If the G3 was previously set up to require a PIN Code, the LED next to the LOCK ICON lights, indicating a PIN Code is required.

1. The cursor is automatically positioned to enter the first character of the PIN Code. Use the UP and DOWN ARROW buttons to move up and down through the numbers 0-9 until the first number in the PIN code is displayed in the field.

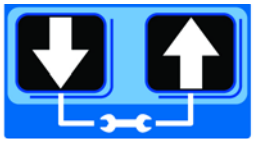

2. Press the ENTER button to set the number. The cursor automatically moves to the next number field.

3. Repeat steps 1 and 2 for each PIN Code prompt field.

If the PIN Code you entered is correct, the first editable character on the display will flash.

Selecting Advanced Setup Options

1. Press the UP or DOWN ARROW button to move up or down through Advanced Options A1 - A7.

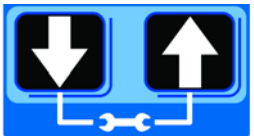

2. Press the ENTER button to set the selection.

A2 - Low Level Alarm Time

Pump ON mode only.

Programs the amount of time in MM: SS (minutes and seconds) the pump can run between a Low Level Warning and a Low Level Fault to help protect unit from running dry.

The maximum recommended length of time is 3:00 minutes.

Fault, and Low Level LED illuminate.

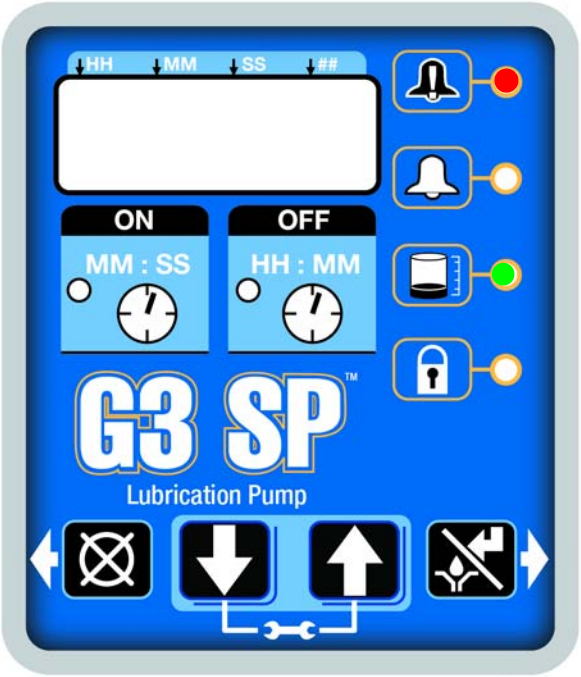

FIG. 20

NOTE: When programming a time of less than 10 minutes you **must** program a leading zero in the first number field and press the ENTER button to save the zero selection.

1. To set the time use the UP or DOWN ARROW button to scroll through numerals 0 to 9 until the desired number appears in the first MM (minutes) field.

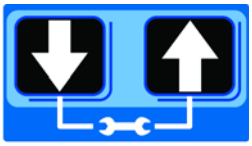

2. Press the ENTER button to lock in the selection. The next MM number field to the right flashes indicating it is ready for programming.

3. Use the UP or DOWN ARROW button to scroll through numerals 0 to 9 until the desired number appears in the second MM number field.

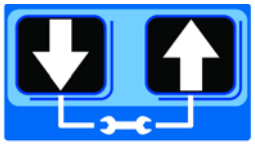

4. Press the ENTER button to lock in the selection.

   The next number field to the right flashes and the LED lights under SS; indicating it is ready to program the seconds fields.

5. Repeat steps 1 - 4 to set the SS (seconds) fields.

6. After pressing the ENTER button to set the last SS field, all the programmed ON Time information is saved.

A-4 Alarm Retry

Programs the number of times G3 will automatically retry running a lubrication cycle after a cycle alarm activates. The default setting is 0. For assistance determining a reasonable number of Alarm Retries to program for your application, contact Graco Customer Service or your local Graco distributor.

A Warning LED illuminates and Er: CY flashes once every 10 seconds.

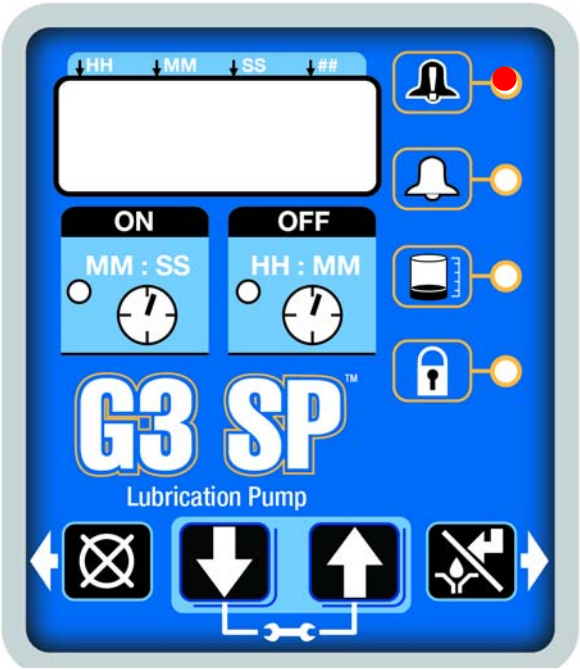

FIG. 21

To set the Alarm Retry:

1. The default value 0000 appears in the display.

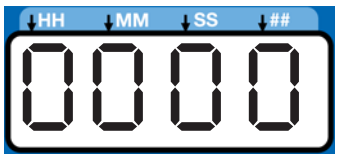

2. Press the UP or DOWN ARROW button to move up or down through number 0-9.

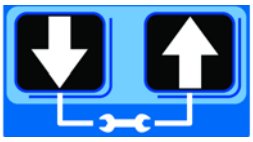

3. When the correct number displays, press the ENTER button to set the number.

4. Repeat 2 - 3 to set the remaining fields.

5. Press the ENTER button to exit Advanced Programming.

A-5 Active Alarm

Changes the alarm output behavior. Uses output to determine if a fault has occurred.

Fault and ON LED's illuminate.

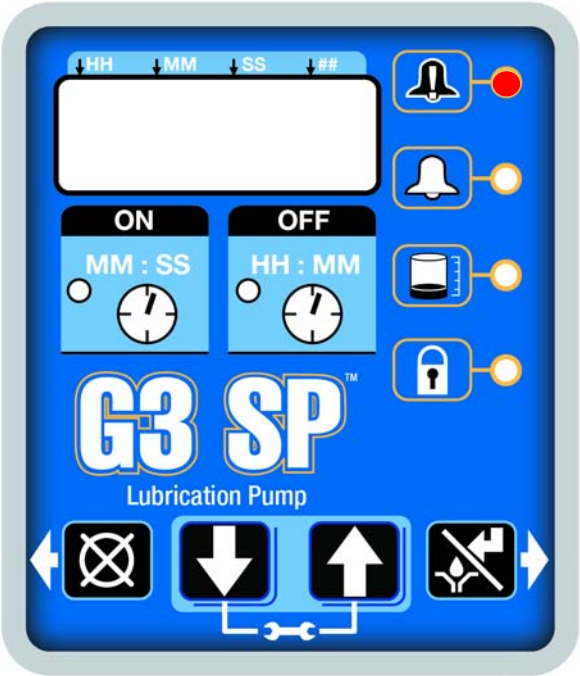

FIG. 22

1. The default OFF displays.

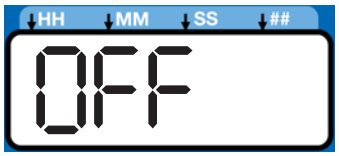

2. Press the UP or DOWN ARROW button to change OFF to ON on the display to activate alarm condition.

3. Press the ENTER button to exit Advanced Programming.

A-7- Constant Alarm Output on Fault

This function changes the behavior of the alarm output in a fault from either toggling once every second (default) or steady on.

Fault and Warning LEDs Illuminate

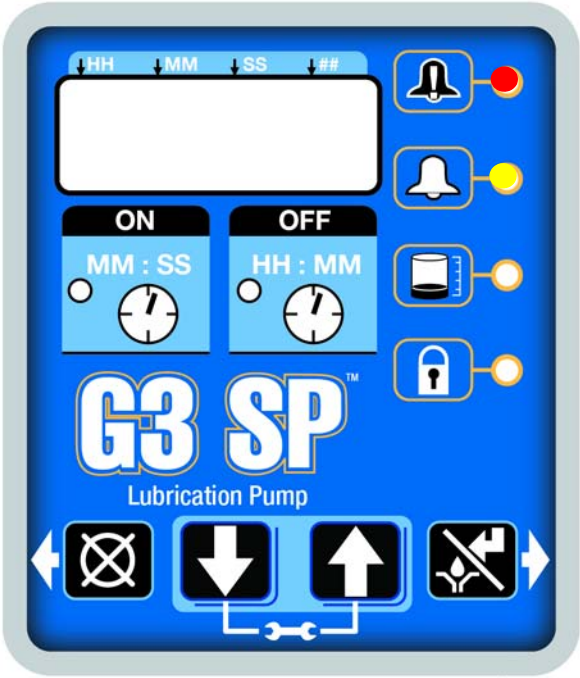

FIG. 23

1. The default OFF is displayed. The alarm output will toggle once a second.

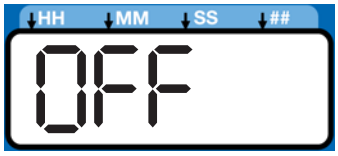

2. Press the UP or DOWN ARROW to change OFF to ON on the display to change the alarm output to be on steady.

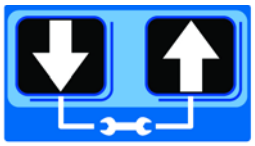

3. Press the ENTER button to exit Advanced Programming.

A-8 - 4 Digit Hour OFF Time

Changes the OFF time from HH:MM to HHHH. Allows for a maximum of 9999 hours of OFF time.

OFF LED illuminates.

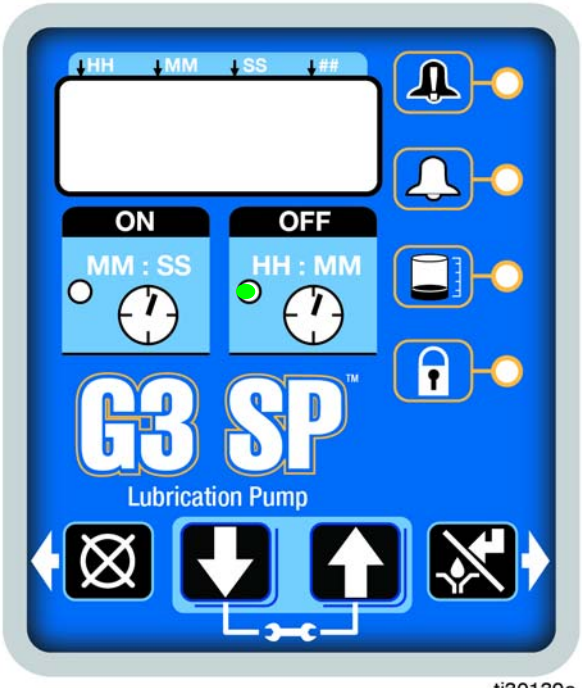

FIG. 24

1. The default OFF displays.

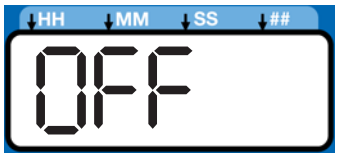

2. Press the UP or DOWN ARROW button to change OFF to ON on the display to activate alarm condition.

3. Press the ENTER button to exit Advanced Programming.

A-9- Toggle Low Level Output on Low Level Warning or Fault

This function changes the behavior of the low level output in a warning or fault from either steady on (default) or toggling once every second.

Low Level and Warning LEDs Illuminate

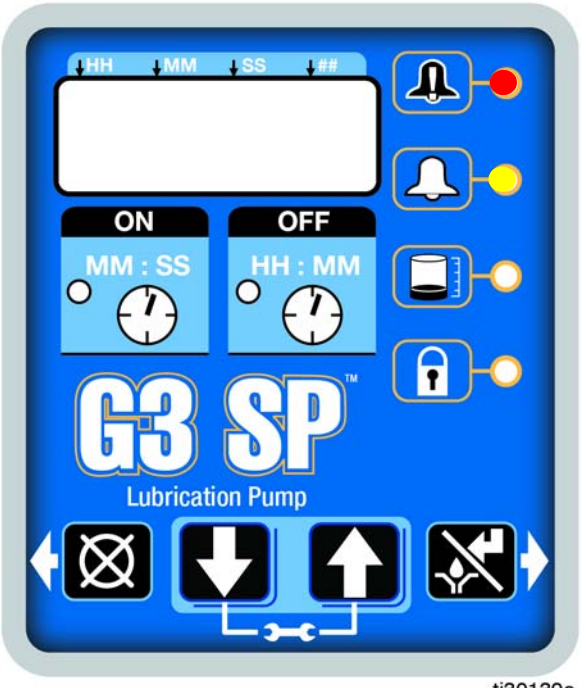

FIG. 25

1. The default OFF is displayed. The alarm output will toggle once a second.

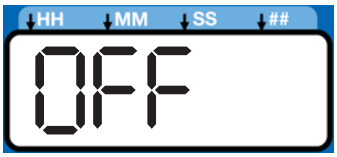

2. Press the UP or DOWN ARROW to change OFF to ON on the display to change the alarm output to be on steady

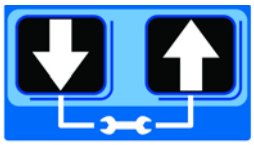

3. Press the ENTER button to exit Advanced Programming.

Models with Firmware 6.03 and Later

A10 - Low Level Reset Upon Power On

This function changes the behavior of the low level upon pump power on. When A10 is on, a low level fault clears when the pump power is cycled. The pump will revolve 5 revolutions, checking to see if the low level condition is still present. If not, it will self clear and continue. If a low level condition exists during the 5 revolutions, it will go into a low level fault.

Low Level ON LED illuminates (FIG. 26).

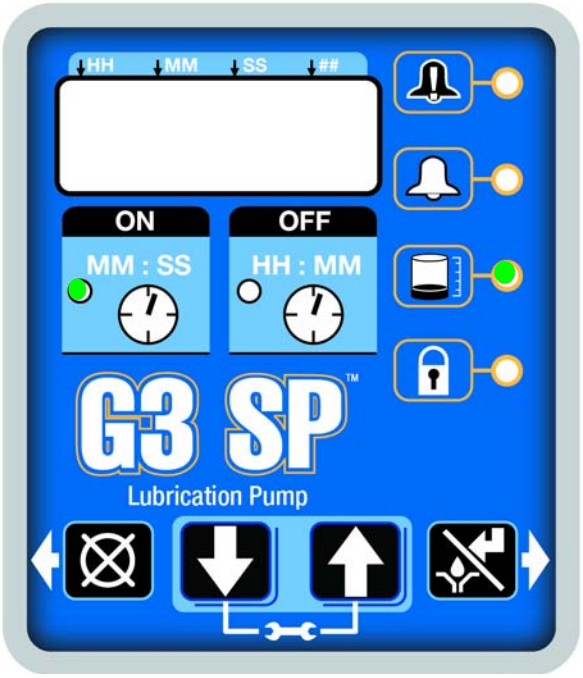

FIG. 26

1. The default OFF is displayed. The alarm output will toggle once a second.

2. Press the UP or DOWN ARROW button to change OFF to ON on the display to change the low level reset upon power on.

3. Press the ENTER button.

A11- Warning Off Through Alarm Relay

This function changes the behavior of the alarm output in a warning condition to always off.

Fault and Warning LEDs Illuminate

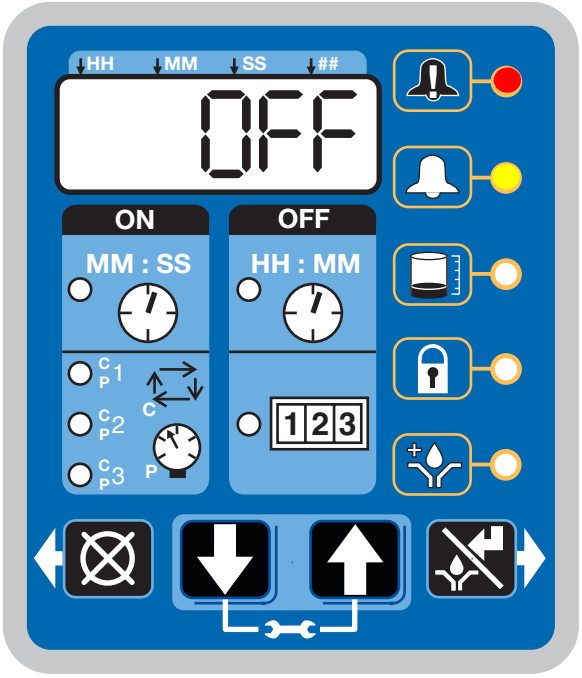

FIG. 27

1. The default OFF is displayed. The alarm output will turn on during a warning condition.

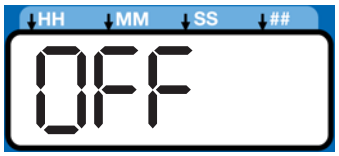

2. Press the UP or DOWN ARROW to change OFF to ON on the display to change the alarm output to be off during a warning condition.

3. Press the ENTER button to exit Advanced Programming.

4.

Operation

During pump operation the controller alternates between the OFF (Rest) Time and the Lubrication Mode controlled by Cycles (CY).

Pump OFF / Rest Mode

1. After setup is complete, the G3 automatically begins to run the OFF Time sequence (FIG. 28).

   (Notice the OFF Time LED on the display lights and the OFF Time counts down on the display.)

   OFF (Rest) Time is displayed as HH:MM when A8 is off or if there is less than one hour remaining when A8 is on. If there is more than one hour remaining and A8 is on it is displayed as HHHH.

   The example shown in FIG. 28 shows an OFF Time of 1 hour and 32 minutes before the lubrication cycle begins with A8 off.

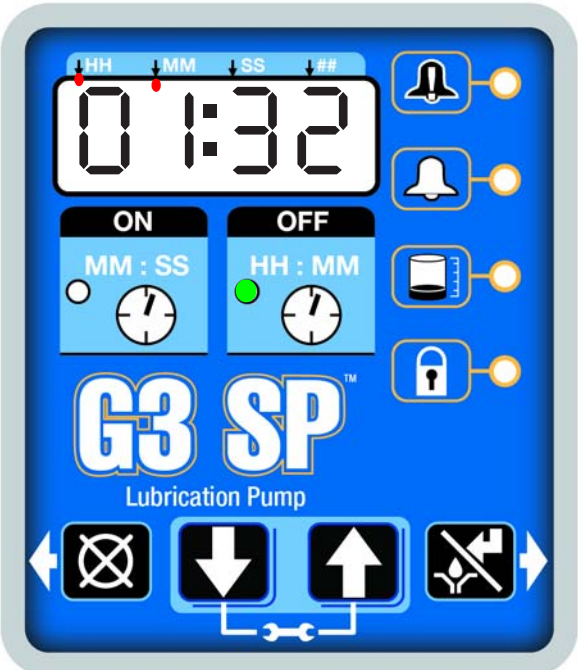

FIG. 28

2. When the OFF Time count reaches zero, the G3 Automatic Lubrication Pump turns the pump on and it runs for the programmed cycle ON (FIG. 29).

Lubrication Mode: Cycle Control (Pump ON)

The Lubrication Mode (Pump ON) is controlled by a cycle sensor.

Cycle Control

- A set number of triggered counts in a cycle based system (CY). Typically a proximity switch connected to a divider valve.
- The display indicates the sensor (CY) and the remaining cycles for that sensor (FIG. 29).

  The example shown in FIG. 29 shows sensor CY with 2 cycles remaining.

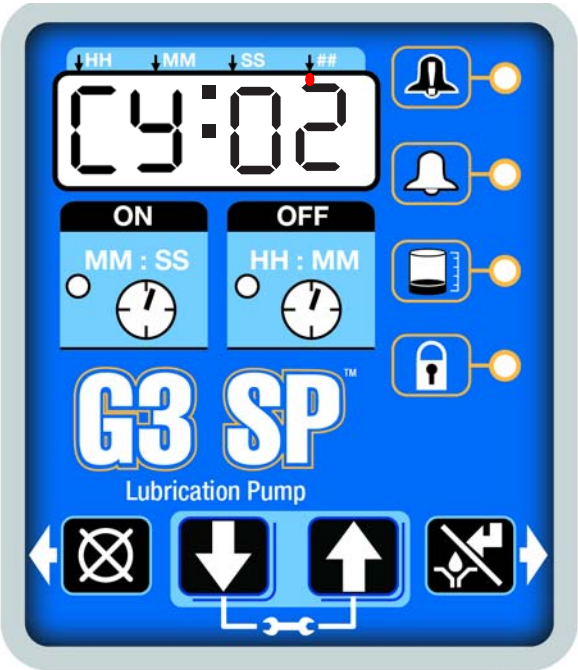

FIG. 29

- The example shown in FIG. 30 (page 31) shows that the lubrication cycle has 2 minutes and 42 seconds of remaining ON Time before it goes into alarm if it does not receive another cycle.

FIG. 30

- When the Cycle count reaches zero, the pump shuts off again and the system again runs OFF Time cycle and the OFF Time LED is now again illuminated (FIG. 28).

  This sequence repeats itself until the device is reprogrammed or an alarm occurs.

- If power to the pump is lost during a lubrication cycle, when power is restored the pump will resume the cycle with the same amount of time remaining in the cycle as when the power was lost.

Manual Run Cycle

To run an extra (non-programmed) lubrication cycle, push the Manual Start button.

Alarms

Any time a Fault / Warning occurs, a combination of LED's will illuminate to notify you there is a problem and help identify the kind of Fault / Warning has occurred.

- Faults and Warnings will not automatically clear.
- To clear an fault, press and hold the RESET button on the display button pad for 3 seconds. 
- To clear a warning press and immediately release the RESET button. 

Fault / Warning Scenarios

The following pages describe the most likely fault / warnings you could receive.

Alarm Type	What it Looks Like	What it Indicates	Solution
Low Level Warning		Level of lubricant in reservoir is low and additional lubricant needs to be added. Unit continues to operate as normal for a limited period of time until a low level alarm is triggered.	Add lubricant to reservoir. After lubricant is added, press the RESET button to clear the warning. 

Low Level Fault		Level of lubricant in reservoir is low and additional lubricant needs to be added. Unit stops pumping and displays amount of accumulated time since the alarm was triggered.	Add lubricant to reservoir. After lubricant is added press and hold the RESET button to clear fault. If repriming pump is required, the low level alarm time should be decreased. See A-2: Advanced Programming, Low Level Alarm Time page 25.
Cycle Warning		Indicates that a cycle was not completed in the amount of time - 4 minutes. Unit will continue to operate for the number of lubrication cycles set by the warning retry parameter (see Advanced Programming, page 24). If the warning condition clears itself on the next automatic lubrication cycle, the warning is cleared and the unit continues normal operation.	Examine system to determine if you have a plugged or broken line or other component failure, i.e., divider valve. Press the RESET button to clear warning.

Cycle Fault		Indicates that a cycle was not completed in the amount of time - 4 minutes.	Examine system to determine if you have a plugged or broken line or other component failure, i.e., divider valve. Press and hold the RESET button to clear fault. 
System Fault		An internal fault has occurred.	Contact Graco Customer Service.

Duty Cycle Warning	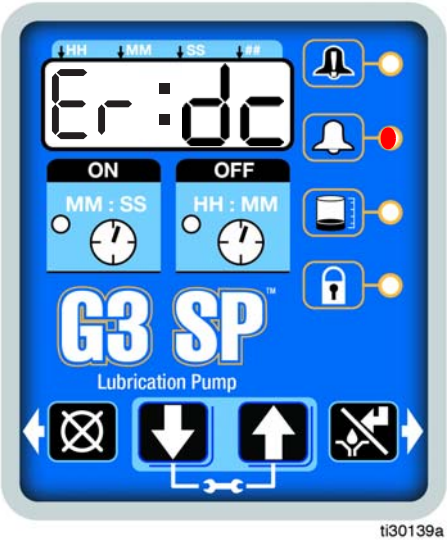	Indicates that a pump has exceeded the 33% duty cycle. Unit will continue to operate for an additional 3 lubrication cycles. If the duty cycle falls below 33% the warning condition clears itself and the unit continues normal operation.	Increase OFF time or add pump elements Examine the system to determine if you have a plugged or broken line or other component failure, i.e. divider valve. Press the RESET button to clear warning. 
Duty Cycle Fault		Indicates that a pump has exceeded the 33% duty cycle. Unit stop pump and displays accumulated time since the alarm was triggered.	Increase OFF time or add pump elements Examine the system to determine if you have a plugged or broken line or other component failure, i.e. divider valve. Press the RESET button to clear fault. 

Motor Current Warning		The measured motor current is above the recommended operating maximum value. Continued use at excessive motor currents could reduce life or cause permanent damage.	Examine system to make sure it is operating correctly. A blocked line could create excessive motor current Examine pump to ensure that it is rotating properly. If necessary, contact Graco Customer Service.
Temperature Warning		The internal temperature of the unit is out of its recommended operating range. Use of the unit outside of the recommended temperature range could cause degraded system performance and possible damage.	Ensure the unit is used in the correct operating environment for the specific temperature: -13° F to 158° F (-25° C to 70°C). If necessary contact Graco Customer Service.

Fault/Warning Scenarios for Firmware Versions 6.06 and Later for Non-DMS Models and 7.09 and later for DMS Models

Alarm Type	What it Looks Like	What it Indicates	Solution
Low Power Warning	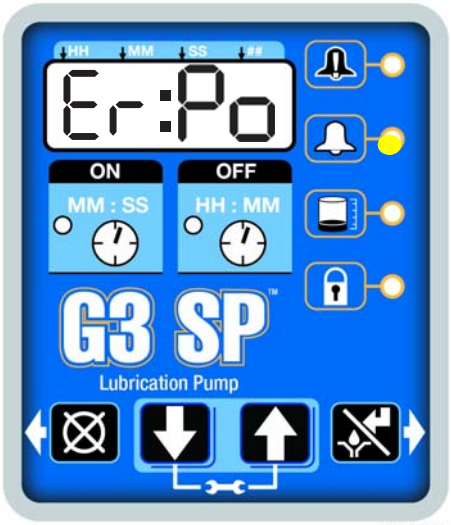	If there is a voltage drop at the power source during operation, the pump will go into a low power warning condition. The unit will continue to operate for a total of 15 minutes before going into a Low Power Fault. Also if the pump power cycles on power up for a minimum of 3 times, the pump will display a low power warning. If the warning condition clears itself, the warning is cleared and the unit continues operation.	Check voltage and available current output at the power source of the pump.
Low Power Fault		There is a low voltage condition at the power source.	Check voltage and available current output at the power source of the pump. Press and hold the RESET button to clear fault. 

Troubleshooting

Problem	Cause	Solution
Unit does not power on	Incorrect/loose wiring	Refer to Installation instructions, page 8.
	Tripped external fuse due to internal component failure	Contact Graco Customer Service.
	Tripped external fuse due to pumping non-cold weather lubricant in cold weather -13°F (-25°C)	Replace lubricant with pumpable lubricant, rated for environmental conditions and application. Replace fuse.
Unit is not operating based on the time that was programmed	Time entered was misinterpreted as MM:SS instead of HH:MM (or visa versa)	Verify the unit was programmed as intended, referencing programming instructions. Note the dot designation for hours, minutes, seconds on the top row of the display.
Lubricant leaks past seal located on the bottom of the reservoir	Reservoir retaining tabs are cracked or broken	Replace reservoir.
	Reservoir is being pressurized during filling	Ensure vent hole is not plugged. If problem persists, contact Graco Customer Service or your local Graco distributor for assistance.
Unit not pumping during ON cycle, but controller lights and functions	Failed motor	Replace unit.
Pump takes several minutes before it begins pumping at the highest pump volume setting (no stroke adjust spacers installed)	Pumping non-cold weather lubricant in cold weather -13°F (-25°C)	Add 1 stroke adjust spacer and adjust lube cycle time to accommodate the difference in pump volume per stroke.
Dim display, unit is not operating	Tripped internal, resettable fuse due to internal component failure or sensor short circuit condition	Verify sensor and manual run inputs have not created a short circuit condition. Cycle power.
Display acts erratically	Faulty cycle/pressure wiring connection to unit	Unplug cycle/pressure cables from G3. Plug cables in one at a time to identify the faulty connection.

Maintenance

Frequency	Component	Required Maintenance
Daily and at refill	Zerk Fittings	Keep all fittings clean using a clean dry cloth. Dirt and/or debris can damage pump and/or lubrication system.
Daily	G3 Pump Unit and Reservoir	Keep pump unit and reservoir clean using a clean dry cloth.
Daily	Display	Keep display clean using a clean dry cloth.
Monthly	External Wiring Harness	Verify external harnesses are secure.

Parts - 2 Liter Models

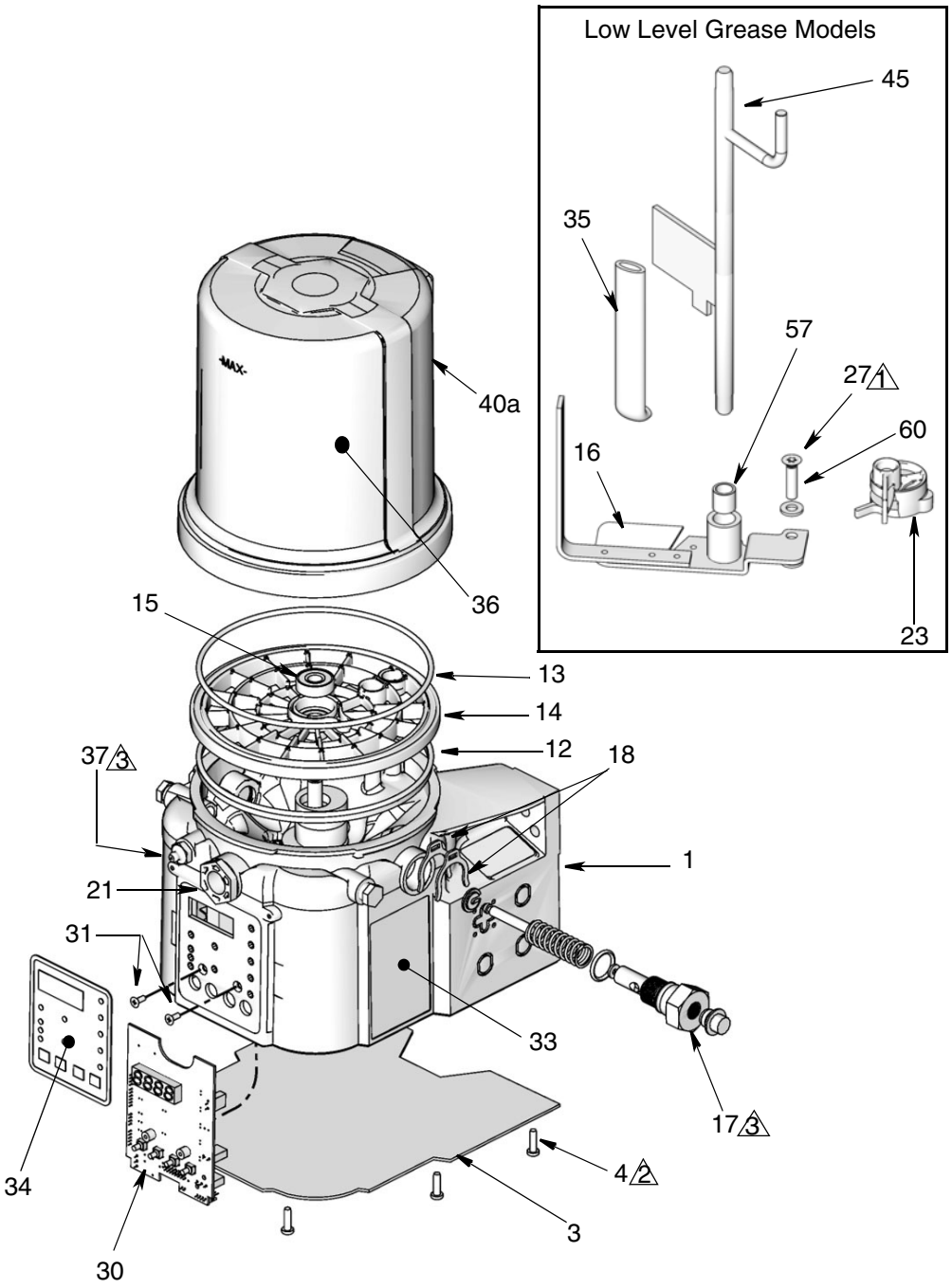

1 Torque to 4 in. lbs (0.45 N.m)

2 Torque to 30 in. lbs (3.4 N.m)

3 Torque to 50 in. lbs (5.6 N.m)

Parts - 4 Liter and Larger Models

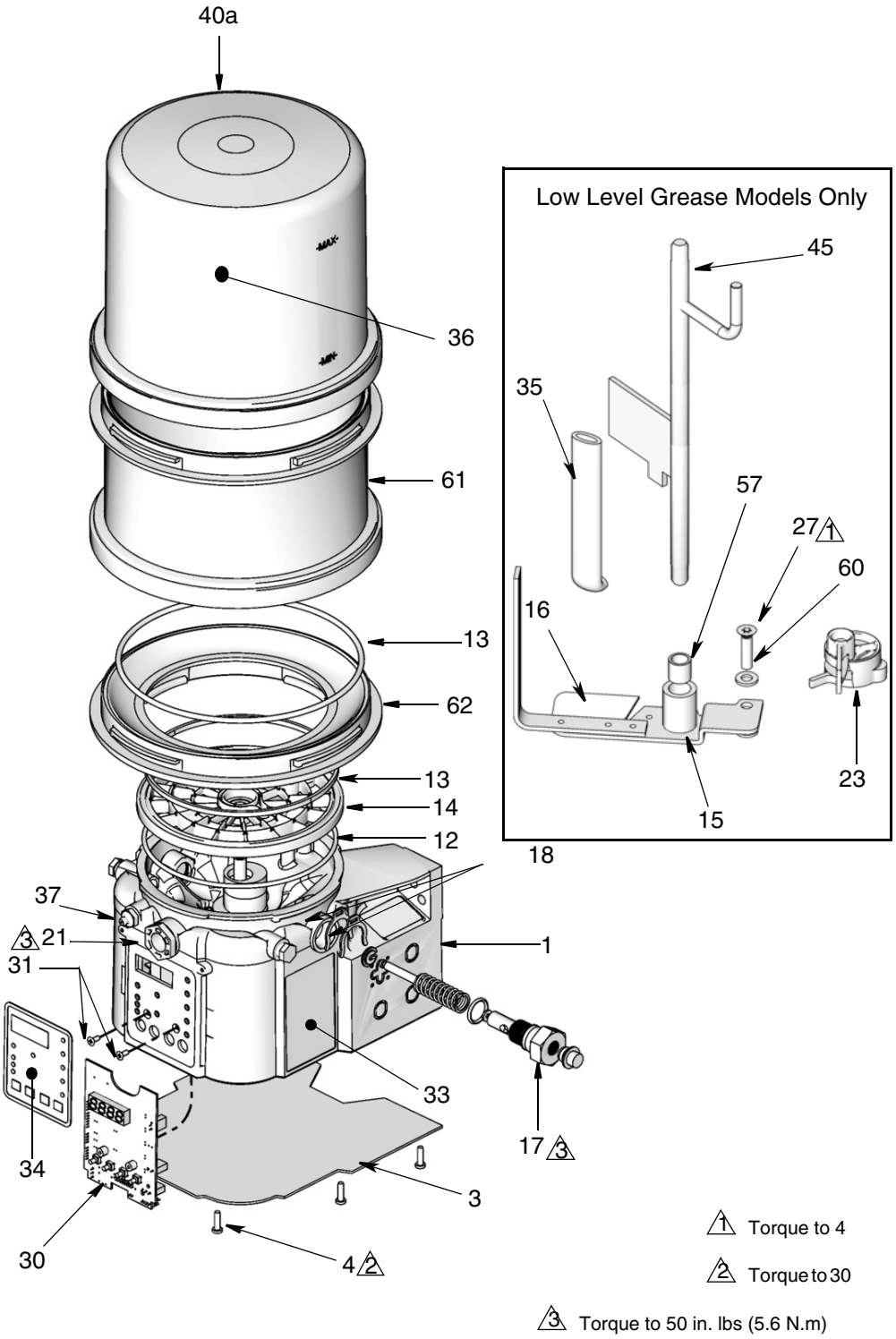

Parts

Ref	Part	Description	Qty
1		BASE, three pump housing	1
3	278142	COVER, bottom, with seal	1
4	115477	SCREW, mach, torx pan hd	9
12	127079	RECT-RING, included in Kit 571042, 571069, 571179	1
13	124396	O-RING, 258, included in Kit 571042, 571044, 571045, 571069, 571179	2
14		PLATE, ricer	1
15		BEARING, ball	1
16		PADDLE, stirring, 2 Liter models, included in Kit 571044	1
		PADDLE, stirring, 4 Liter models and larger	1
17		PUMP, element, included in Kit 571041	1
18	16F368	SPACER, stroke adjust, included in Kit 571041	2
21	278145	PLUG, pump, 3/4-16	2
23❖	278136	PADDLE, low level	1
27	123025	SCREW, M6	1
30 ‡★	258697	BOARD, circuit,	1
31	119228	SCREW, machine, flat head	2
33▲	16A579	LABEL, safety	1
34	129490	LABEL, overlay	1
35		WIPER, stirring, models, included in Kit 571044	1
36		LABEL, brand	1
37	123741	FITTING, Zerk, grease	1
40a	24E984	RESERVOIR, 2 liter, grease, included in Kit 571042, 571069	1
40a	24B702	RESERVOIR, 4 liter, grease, included in Kit 571183	1
45†	24D838	BAFFLE, low level, 2 liter models	1
†	24E246	BAFFLE, low level, 4 liter models	1

Ref	Part	Description	Qty
†	24F836	BAFFLE, low level, 8 liter models	1
†	24F923	BAFFLE, low level, 12 liter models	1
†	24F924	BAFFLE, low level, 16 liter models	1
57	117156	BEARING, sleeve	1
58▲	196548	LABEL	1
60	16D984	WASHER, low level models	2
61		RESERVOIR, mid-section (see quantity by size / model below)	
		8 Liter models	1
		12 Liter models	2
		16 Liter models	3
62		ADAPTER, reservoir	1
72		PLATE, baffle, low level	1
73		SCREW, machine	2
74		SPRING, plate, valve, reset	1
87		SEAL, lower, reservoir	1
88		SPACER, seal, base	1
89		PLATE, valve	1
200	127780	CABLE, 15 ft (4.5 m), SOOW w/7 pos, 5 pin, 90 deg	1
	127781	CABLE, 20 ft (6.1 m), SOOW, w/7 pos, 5 pin, 90 deg	1
	127782	CABLE, 30 ft (9.1m) SOOW, w/7 pos, 5 pin, 90 deg	1
	16U790	CABLE, DIN, bare)	1
201	124300	CABLE, M12, 15 ft., 4 wire, straight male to flying leads	1
	124333	CABLE, M12, 15 ft., 4 wire, straight male to female	1
202	124301	CONNECTOR, Eurofast, fem, straight, 4Pin	1
	124594	CONNECTOR, Eurofast, 4 Pin	1
	124595	CONNECTOR, Eurofast, 5 Pin	1

▲ *Replacement Danger and Warning labels, tags and cards are available at no cost.*

❖ Also order Ref 27, Part No. 123025 and Ref 60, Part No. 16D984

‡★ Also order Ref 31, Part No. 119228 and Ref 34, Part No. 16A073

† Also order Ref. 57, Part No. 117156 when ordering this part.

Pressure Relief Valves

Important Information regarding Pressure Relief Valve 16C807.

◆ ***Pressure Relief Valve 16C807 can only be used on the G3 Pump.*** It is not intended for use with any other products.

The pressure relief valve uses a pressure adjustment screw (a) to set the pressure release point. ***It is not intended as a way to relieve pressure during normal operation,*** but as a protective measure in the event there is an unintended pressure increase in the system. Do not use this pressure relief valve a means of relieving pressure in day-to-day, normal cycle operation.

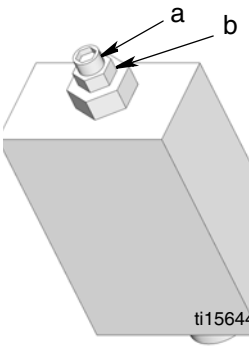

a = adjustment screw
b = locking nut

The pressure adjustment screw will require periodic adjustments. Whenever the valve is set/adjusted (after the set point is found) it is important to ensure that the valve is not bottomed out and there is at least 1/2 turn of adjustment remaining. This is determined by turning the screw (a) 1/2 turn and then back turning it out again.

NOTE: Turning adjustment screw (a) clockwise increases pressure.

Part	Description	Qty
16C807◆	VALVE, pressure relief, 500-3500 psi (3.44 MPa, 34.4 bar - 24.1 MPa, 241 bar), Set pressure 3000 psi ± 10% (20.68 MPa, 206.8 bar ± 10%) Included in Kit 571028	1
563156	VALVE, pressure relief, 750 psi (5.17 MPa, 51.71 bar)	1
563157	VALVE, pressure relief, 1000 psi (6.89 MPa, 68.95 bar)	1
563158	VALVE, pressure relief, 1500 psi (10.34 MPa, 103.42 bar)	1
563159	VALVE, pressure relief, 2000 psi (13.78 MPa, 137.89 bar)	1
563160	VALVE, pressure relief, 2500 psi (17.23 MPa, 172.36 bar)	1
563161	VALVE, pressure relief, 3000 psi (20.68 MPa, 206.84 bar)	1
563190	VALVE, pressure relief, 5500 psi (37.92 MPa, 379.21 bar)	1

Fuses

Part	Description	Qty
571039	FUSE, 12 volt DC	1
571040	FUSE, 24 volt DC	1

Installation and Repair Kits

Kit No.	Description	Manual Number
571026	KIT, output union, 3 pump	3A0523
571063	KIT, output union, 2 pump	
571028	KIT, return to reservoir NPT, includes pressure relief valve 16C807	3A0525
571071	KIT, return to reservoir BSPP, includes pressure relief valve 16C807	
571036	KIT, cover with “G” label	NA
571041	KIT, pump element, includes Ref 17, 18, 33	3A0533
571042	KIT, repair, 2 liter reservoir, includes Ref 13, 36, 40	3A0534
571044	KIT, replacement, paddle, 2 liter, for models, includes Ref 13, 16, 35, 57	3A0535
571046	KIT, replacement, paddle, 4-16 liter, includes Ref 13, 16, 35, 57	
571058	KIT, output adapter, NPT	3A0522
571070	KIT, output, adapter, BSPP	
571060	KIT, fill, zerk, leakproof	NA
571183	KIT, repair, reservoir, grease, 4 liter models, includes Ref 13, 36, 40b	3A0534

Technical Data

G3 SP™ Automatic Lubrication Pump		
	US	**Metric**
Pump Output Pressure	5100 psi	35.1 MPa, 351.6 bar
Fill Inlet Pressure	5000 psi	34.4 MPa, 344.7 bar
Power		
100-240 VAC	88 - 264 VAC; 0.8 A current, 90 VA Power, 47/63 Hz, Single phase, inrush/locked rotor, max 40A (1ms)	
12 VDC	9 - 16 VDC; 5 A current, 60 W, inrush/locked rotor 12 A	
24 VDC	18 - 32 VDC; 2.5 A current, 60 W, inrush/locked rotor 6 A	
Outputs - Alarm Relay		
Rated Load	Resistive: 0.4 A at 125 VAC, 2 A at 30 VDC	
	Inductive: 0.2 A at 125 VAC, 1 A at 30 VDC	
Maximum Operation Voltage	Resistive: 250 VAC, 220 VAC	
	Inductive: 250 VAC, 220 VDC	
Maximum Operating Current	Resistive: 3 A (AC), 3A (DC)	
	Inductive: 1.5 A (AC), 1.5 A (DC)	
Maximum Switching Capacity	Resistive: 50 VA, 60 W	
	Inductive: 25 VA, 30 W	
Min Permissible Load	Resistive: 10 µA, 10m VDC	
	Inductive: 10 µA, 10m VDC	
Maximum Operating Current	2 A	
Maximum Operating Power	48 W	
Inputs - Cycle		
Required Switch Type	Normally open (sink, source, or dry contact)	
Sensor Voltage		
Pump Voltage: 100/-240 VAC	24 VDC	
Pump Voltage: 12 VDC	Input Voltage	
Pump Voltage: 24 VDC	Input Voltage	
Load Current		
Pump Voltage: 100-240 VAC	22mA @ 24 VDC	
Pump Voltage: 12 VDC	11mA @ 12 VDC	
Pump Voltage: 24 VDC	22mA @ 24 VDC	
Maximum Residual Voltage		
Pump Voltage: 100-240 VAC	4 V	
Pump Voltage: 12 VDC	2 V	
Pump Voltage: 24 VDC	4 V	
Maximum Off Current		
Pump Voltage: 100-240 VAC	1.5 mA	
Pump Voltage: 12 VDC	1 mA	
Pump Voltage: 24 VDC	1.5 mA	
Input Impedance	1.1 K	

Response Time	60 ms	
Cycle Rate	8.0 Hz (50% duty cycle)	
Fluid		
Grease Models	Grease NLGI 000 - #2	
Pumps	Up to 3	
Pump Output	0.12 in.^{3} / minute per outlet - 2 spacers 0.18 in.^{3} / minute per outlet - 1 spacer 0.25 in.^{3} / minute per outlet - 0 spacers	(2 cm^3) / minute per outlet - 2 spacers (3 cm^3) / minute per outlet - 1 spacer (4 cm^3) / minute per outlet - 0 spacers
Pump Outlet	1/4-18 NPSF. Mates with 1/4-18 NPT male fittings	
Reservoir Size	2, 4, 8, 12 Liters	
IP Rating	IP69K	
Sensor Inputs	1 cycle	
Ambient Temps	-40°F - 158°F	-40°C to 70°C
Weight (Dry - includes power cord and plug)	13.3 lbs	6.03 kg
Wetted Parts	nylon 6/6 (PA), amorphous polyamide, zinc plated steel, carbon steel, alloy steel, stainless steel, nitrile rubber (buna-N), bronze, nickel plated alnico, chemically lubricated acetal, aluminum, PTFE	
Sound Data	<60 dB	

Dimensions

Model	Height		Width		Depth	
	Inches	cm	Inches	cm	Inches	cm
2L	13.25	33.65	8.00	20.32	9.00	22.86
4L	14.50	36.83	9.25	23.50	10.00	25.40
8L	18.50	47.00	9.25	23.50	10.00	25.40
12L	23.00	58.42	9.25	23.50	10.00	25.40

Mounting Pattern

(For correct mounting configuration, choose either Option 1 or Option 2). See P/N 126916 template.

Option 1

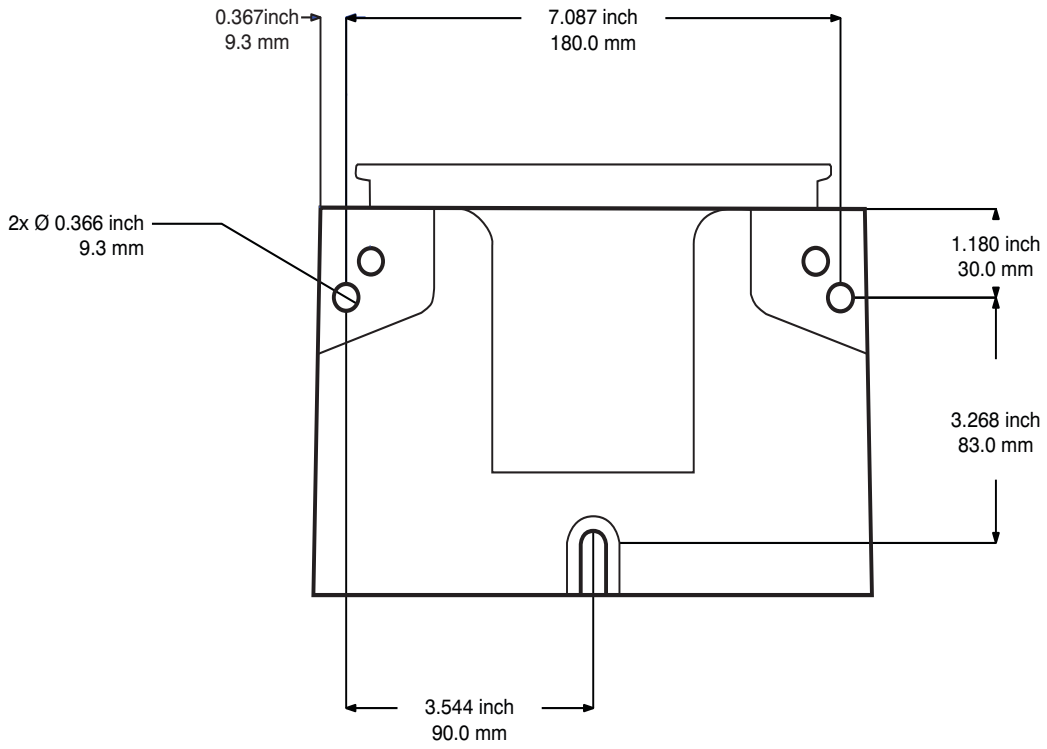

Option 2

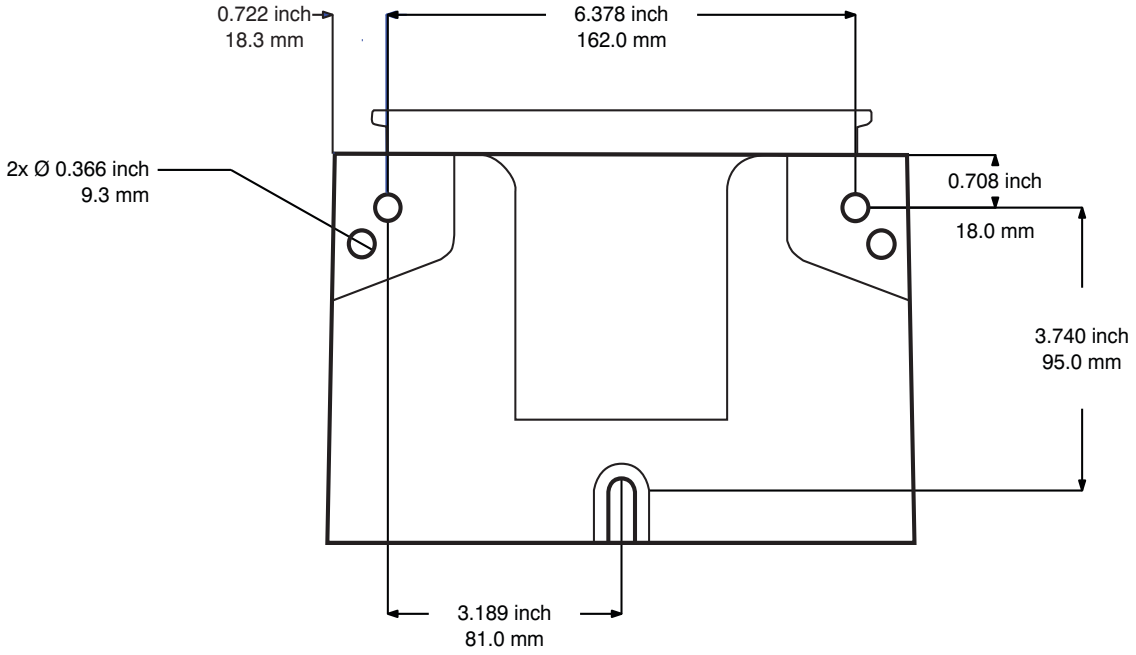

FIG. 31

Notes

Graco Standard Warranty

Graco warrants all equipment referenced in this document which is manufactured by Graco and bearing its name to be free from defects in material and workmanship on the date of sale to the original purchaser for use. With the exception of any special, extended, or limited warranty published by Graco, Graco will, for a period of twelve months from the date of sale, repair or replace any part of the equipment determined by Graco to be defective. This warranty applies only when the equipment is installed, operated and maintained in accordance with Graco's written recommendations.

This warranty does not cover, and Graco shall not be liable for general wear and tear, or any malfunction, damage or wear caused by faulty installation, misapplication, abrasion, corrosion, inadequate or improper maintenance, negligence, accident, tampering, or substitution of non-Graco component parts. Nor shall Graco be liable for malfunction, damage or wear caused by the incompatibility of Graco equipment with structures, accessories, equipment or materials not supplied by Graco, or the improper design, manufacture, installation, operation or maintenance of structures, accessories, equipment or materials not supplied by Graco.

This warranty is conditioned upon the prepaid return of the equipment claimed to be defective to an authorized Graco distributor for verification of the claimed defect. If the claimed defect is verified, Graco will repair or replace free of charge any defective parts. The equipment will be returned to the original purchaser transportation prepaid. If inspection of the equipment does not disclose any defect in material or workmanship, repairs will be made at a reasonable charge, which charges may include the costs of parts, labor, and transportation.

THIS WARRANTY IS EXCLUSIVE, AND IS IN LIEU OF ANY OTHER WARRANTIES, EXPRESS OR IMPLIED, INCLUDING BUT NOT LIMITED TO WARRANTY OF MERCHANTABILITY OR WARRANTY OF FITNESS FOR A PARTICULAR PURPOSE.

Graco's sole obligation and buyer's sole remedy for any breach of warranty shall be as set forth above. The buyer agrees that no other remedy (including, but not limited to, incidental or consequential damages for lost profits, lost sales, injury to person or property, or any other incidental or consequential loss) shall be available. Any action for breach of warranty must be brought within two (2) years of the date of sale.

GRACO MAKES NO WARRANTY, AND DISCLAIMS ALL IMPLIED WARRANTIES OF MERCHANTABILITY AND FITNESS FOR A PARTICULAR PURPOSE, IN CONNECTION WITH ACCESSORIES, EQUIPMENT, MATERIALS OR COMPONENTS SOLD BUT NOT MANUFACTURED BY GRACO. These items sold, but not manufactured by Graco (such as electric motors, switches, hose, etc.), are subject to the warranty, if any, of their manufacturer. Graco will provide purchaser with reasonable assistance in making any claim for breach of these warranties.

In no event will Graco be liable for indirect, incidental, special or consequential damages resulting from Graco supplying equipment hereunder, or the furnishing, performance, or use of any products or other goods sold hereto, whether due to a breach of contract, breach of warranty, the negligence of Graco, or otherwise.

FOR GRACO CANADA CUSTOMERS
The Parties acknowledge that they have required that the present document, as well as all documents, notices and legal proceedings entered into, given or instituted pursuant hereto or relating directly or indirectly hereto, be drawn up in English. Les parties reconnaissent avoir convenu que la rédaction du présente document sera en Anglais, ainsi que tous documents, avis et procédures judiciaires exécutés, donnés ou intentés, à la suite de ou en rapport, directement ou indirectement, avec les procédures concernées.

Graco Information

For the latest information about Graco products, visit www.graco.com.

TO PLACE AN ORDER, contact your Graco distributor or call to identify the nearest distributor.
Phone: 612-623-6928 **or Toll Free:** 1-800-533-9655, **Fax:** 612-378-3590

All written and visual data contained in this document reflects the latest product information available at the time of publication. Graco reserves the right to make changes at any time without notice.

Original instructions. This manual contains English. MM 3A4676
Graco Headquarters: Minneapolis
International Offices: Belgium, China, Japan, Korea

GRACO INC. AND SUBSIDIARIES • P.O. BOX 1441 • MINNEAPOLIS MN 55440-1441 • USA

www.graco.com
October 2018